NOTICE OF REVISION (NOR)

THIS REVISION DESCRIBED BELOW HAS BEEN AUTHORIZED FOR THE DOCUMENT LISTED

1. DATE (YYYYMMDD): 20011210

Form Approved OMB No. 0704-0188

The public reporting burden for this collection of information is estimated to average 2 hours per response, including the time for reviewing instructions, searching existing data sources, gathering and maintaining the data needed, and completing and reviewing the collection of information. Send comments regarding this burden estimate or any other aspect of this collection of information, including suggestions for reducing the burden, to Department of Defense, Washington Headquarters Services, Directorate for Information Operations and Reports (0704-0188), 1215 Jefferson Davis Highway, Suite 1204, Arlington, VA 22202-4302. Respondents should be aware that notwithstanding any other provision of law, no person shall be subject to any penalty for failing to comply with a collection of information if it does not display a currently valid OMB control number.
PLEASE DO NOT RETURN YOUR COMPLETED FORM TO THIS ADDRESS. RETURN COMPLETED FORM TO THE GOVERNMENT ISSUING CONTRACTING OFFICER FOR THE CONTRACT/PROCURING ACTIVITY NUMBER LISTED IN ITEM 2 OF THIS FORM.

2. PROCURING ACTIVITY NO.

3. DODAAC

4. ORIGINATOR

a. TYPED NAME (First, Middle Initial, Last): MICHAEL R. BROWN

b. ADDRESS (Street, City, State, Zip Code): U.S. ARMY TACOM, WARREN, MI 48397-5000

5. CAGE CODE: 19207

6. NOR NO.: 3-5

7. CAGE CODE: 19207

8. DOCUMENT NO.: 11648681

9. TITLE OF DOCUMENT: BASE-PILLOW BLOCK

10. REVISION LETTER

a. CURRENT: ORIGINAL

b. NEW: A

11. ECP NO.: TACGV-1045

12. CONFIGURATION ITEM (OR SYSTEM) TO WHICH ECP APPLIES: M809

13. DESCRIPTION OF REVISION

CHANGE FROM:

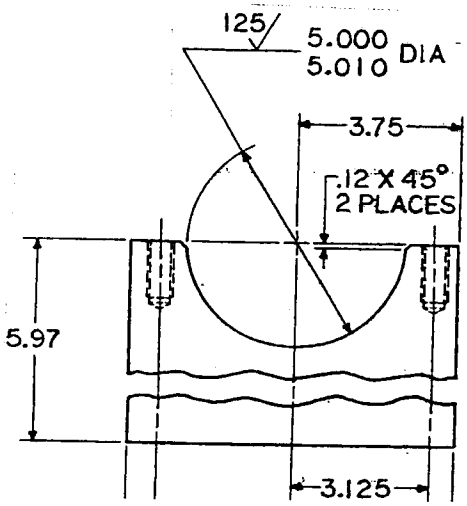

TO:

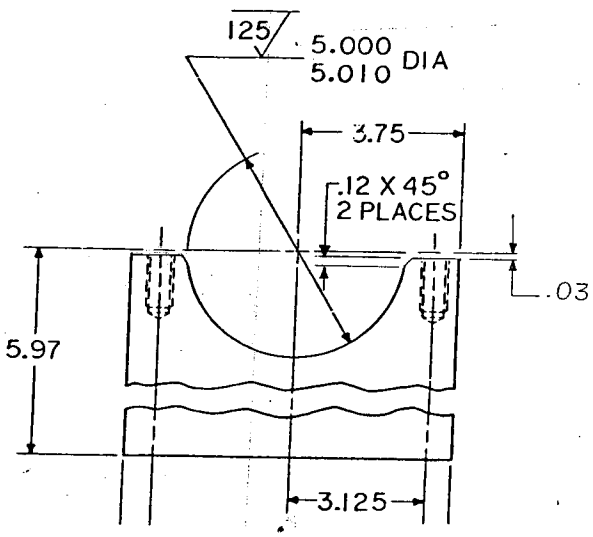

14. THIS SECTION FOR GOVERNMENT USE ONLY

a. (X one)

- [X] (1) Existing document supplemented by this NOR may be used in manufacture.
- [ ] (2) Revised document must be received before manufacturer may incorporate this change.
- [ ] (3) Custodian of master document shall make above revision and furnish revised document.

b. ACTIVITY AUTHORIZED TO APPROVE CHANGE FOR GOVERNMENT

c. TYPED NAME (First, Middle Initial, Last)

d. TITLE: PACKAGING SPECIALIST

e. SIGNATURE: Michael Brown

f. DATE SIGNED (YYYYMMDD): 20011210

15.a. ACTIVITY ACCOMPLISHING REVISION

b. REVISION COMPLETED (Signature)

c. DATE SIGNED (YYYYMMDD)