REVISIONS			
LTR	DESCRIPTION	DATE	APPROVED
B	REVISED & REDRAWN PER ECN J68906	88-10-6	JAI
C	REVISED PER ECN J68962	89-01-18	
D	REVISED PER ECN J68976	89-02-08	JAI
E	REVISED PER ECP RCA-K2802, NOR 2, RCA ECN J72310	89-06-15	

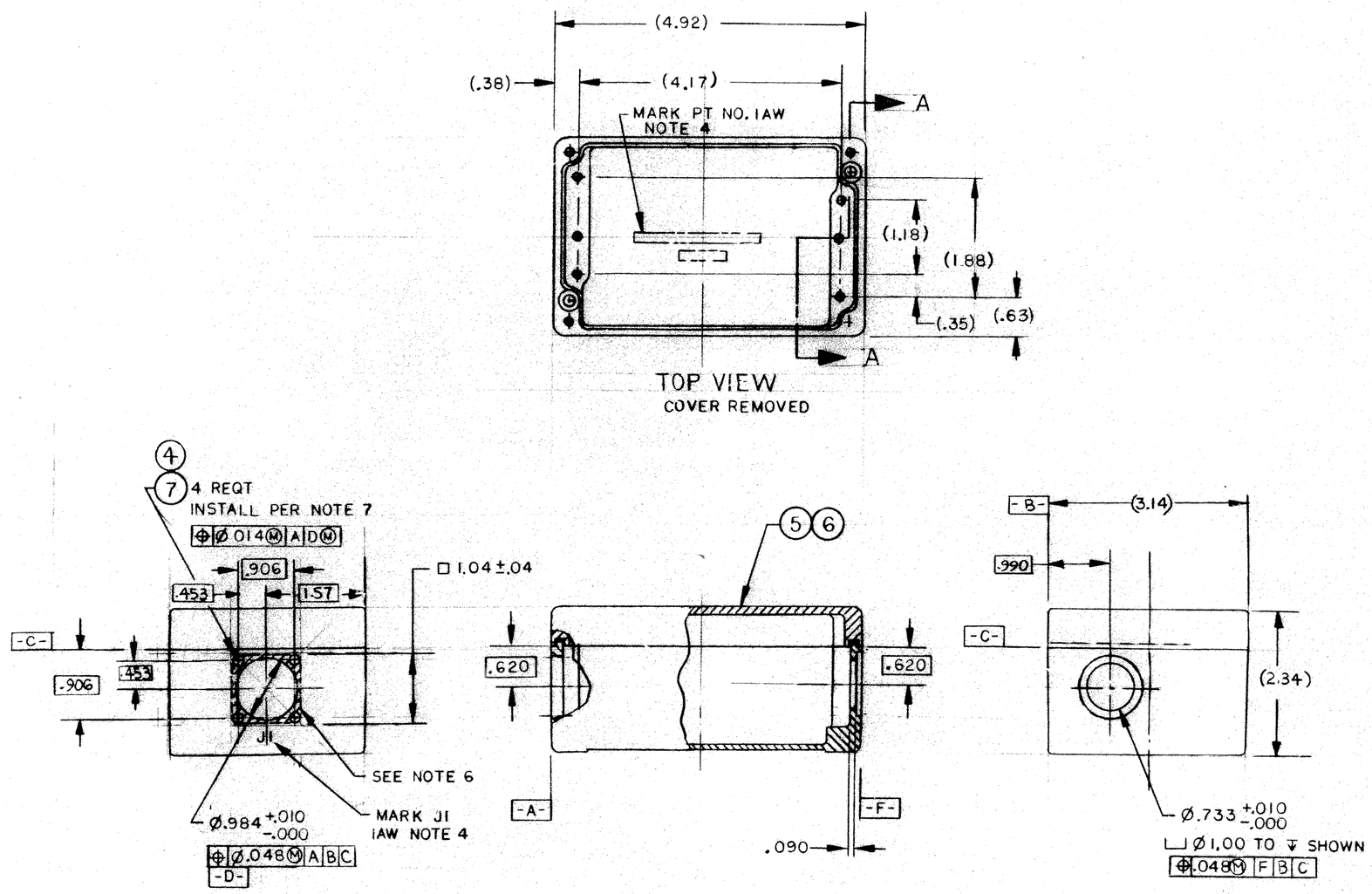

ALTERED ITEM DRAWING

PART NO. 12364110

REVISION STATUS– WHERE MORE THAN ONE SHEET			
SH	REV	SH	REV

12364106 STE-MI/FVS

SEE ENGINEERING RECORDS

NEXT ASSY | USED ON

APPLICATION

UNLESS OTHERWISE SPECIFIED DIMENSIONS ARE IN INCHES

TOLERANCES ON: 2 PLACE ±.02 | 3 PLACE ±.010 | ANGLES ± —

MATERIAL

MATL ENGRG

CONTRACT NUMBER DAAE07-87-C-R034

CONTRACTOR: RCA Burlington, Mass.

DRAWN BY K. E. Howe | DATE 88-08-08

CHECKER | ENGINEER

DRAWING APPROVAL 89-02-13

DESIGN APPROVAL 89-03-20

U.S. ARMY TANK AUTOMOTIVE COMMAND
WARREN, MICHIGAN 48090

HOUSING, MACHINING

SIZE	CODE IDENT. NO.	
D	19207	12364110

SCALE 1/1 | UNIT WT. | SHEET 2 OF 2

INTERPRET DRAWING IN ACCORDANCE WITH STANDARDS PRESCRIBED BY DOD-STD-100

BRUNING 44-231 (4470-01)

1076