REVISIONS			
LTR	DESCRIPTION	DATE	APPROVED
A	REVISION LETTER FOR RELEASE ONLY	88-07-01	C. MCMT
B	REVISED PER ECN J68903	88-10-06	JAT
C	REVISED PER ECN J68974	89-02-03	JAT
	INITIAL RELEASE BY ERR RCA-K8650		
D	REVISED PER ECP RCA-K2896, NOR 3 (AN 07603340)	93-09-01	

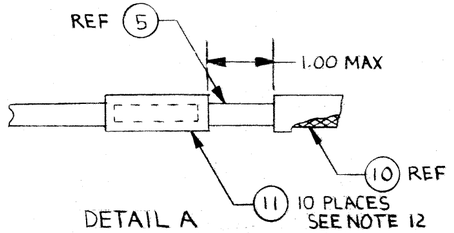

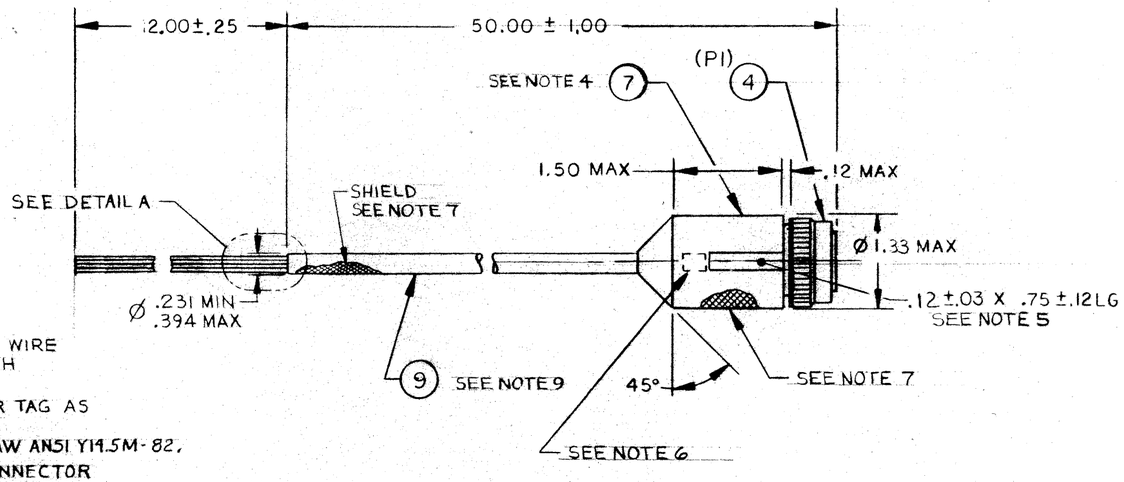

12. LEAD IDENT: HOT STAMP FIND NO. 11 PER WIRE CONNECTION LIST IAW MIL-M-81531. ATTACH CONTACTS PER WIRE CONNECTION LIST.
11. BAG OR TAG IAW MIL-STD-130. MARK BAG OR TAG AS FOLLOWS: 19207ASSY12364105 MFR(FSCM).
10 INTERPRET DIMENSIONS AND TOLERANCE IAW ANSI Y14.5M-82.
9 CABLE MUST WITHSTAND TORSION AT CONNECTOR END OF TWO TIMES THE RATED COUPLING TORQUE OF CONNECTOR OR 45 INCH-LBS, WHICHEVER IS GREATER.
8 CABLE MUST COIL WITHIN A 9.00 INCH DIA WITHOUT PERMANENT SET OR DAMAGE FOR STORAGE AT -30° F THRU 160° F.
7 CABLE SHALL HAVE A TIN COPPER SHIELD APPLIED ONTO A CABLE CORE PER FIND NO. 10. SHIELD SHALL PRODUCE AN AVERAGE 95 % MINIMUM COVERAGE. THIS SHIELD SHALL BE TERMINATED TO ACHIEVE A DIRECT METAL TO METAL "ONE STEP" 360° CONDUCTIVE CONTACT FROM CABLE SHIELD TO REAR OF CONNECTOR. THE SHIELD TO SHELL SHALL BE BONDED TO PRODUCE A D.C. RESISTANCE OF LESS THAN 200 MILLIOHMS FROM P1 SHELL TO CABLE SHIELD END.
6 MARK REF DESIGNATION "P1" WITH .12 HIGH CONTRASTING COLOR CHARACTERS.
5 MARK WITH CONTRASTING COLOR IN LINE WITH CONNECTOR MASTER KEY OF FIND NO. 4. CENTERLINE OF MARKING STRIPE MUST BE WITHIN .25 OF CENTERLINE OF MASTER KEY.
4 MOLD CONNECTOR TERMINATION AND BREAKOUT JUNCTION USING FIND NO. 7. MOLDING COMPOUND SHALL BE BLK POLYURETHANE MATERIAL CONFORMING TO FIND NO. 7.
3 WIRING SHALL BE IAW WIRE CONNECTION LIST.
2 WORKMANSHIP SHALL BE IAW MIL-STD-454, REQUIREMENT 9.
1 CABLE CONSTRUCTION SHALL BE IAW MIL-C-45524

NOTES:

WIRING LIST		
PIN NO.	FIND NO.	CONTACT FIND NO.
P1-A	5	—
P1-B	5	—
P1-C	5	12
P1-E	5	12
P1-F	5	—
P1-R	5	12
P1-S	5	12
P1-T	5	12
P1-U	5	12
P1-SHLD	5	13

REF DES	FIND NO.
P1	4

FIND NO.	QTY REQ'D	CODE IDENT	PART OR IDENTIFYING NO.	SPECIFICATION	NOMENCLATURE OR DESCRIPTION
13	1	81349	MS25036-149	MIL-T-7928	LUG
12	6	81349	M39029/5-115	MIL-C-39029/5	SOCKET CONTACT
11	AR	81349	M23053/5-103-9	MIL-I-23053/5	INSULATION SLEEVING
10	AR	81349	QQB575R36T250	QQ-B-575	SHIELD, WIRE BRAID
9	AR	19207	12304034-8		SLEEVING
8	AR	81349	TYPE UR	MIL-I-46058	CONFORMAL COAT
7	AR	81349	CATEGORY B, TYPE I	MIL-M-24041	MOLDING COMPOUND
6	AR	81349	TYPE I	MIL-M-81531	FOIL, MARKING
5	AR	81349	M22759/11-20-9	MIL-W-22759	WIRE, INS. AWG 20
4	1	81349	M83723/42R1419N	MIL-C-83723/42	CONNECTOR
3	REF	96906		MIL-STD-130	SPEC, IDENTIFICATION
2	REF	96906	REQUIREMENT 9	MIL-STD-454	SPEC, WORKMANSHIP
1	REF	81349	TYPE I	MIL-C-45224	SPEC, CABLE ASSY

PART NO. 12364105

REVISION STATUS— WHERE MORE THAN ONE SHEET: SH | REV | SH | REV

12364106 STE-M/FVS

SEE ENGINEERING RECORDS

NEXT ASSY | USED ON

APPLICATION

UNLESS OTHERWISE SPECIFIED DIMENSIONS ARE IN INCHES

TOLERANCES ON: 2 PLACE ±.02 | 3 PLACE ±.010 | ANGLES ±1°

MATERIAL

MATL ENGRG

CONTRACT NUMBER DAAE07-87-C-R034

CONTRACTOR: RCA Burlington, Mass.

DRAWN BY H. E. Hoole | DATE 88-06-15

CHECKER JAT | ENGINEER JAT 89-03-13

DRAWING APPROVAL

DESIGN APPROVAL 89-03-20

U.S. ARMY TANK AUTOMOTIVE COMMAND
WARREN, MICHIGAN 48090

CABLE SUBASSEMBLY

SIZE D | CODE IDENT. NO. 19207 | 12364105

SCALE 1/1 | UNIT WT. | SHEET 1 OF 1

INTERPRET DRAWING IN ACCORDANCE WITH STANDARDS PRESCRIBED BY DOD-STD-100

BRUNING 44 232 64970-01

1076