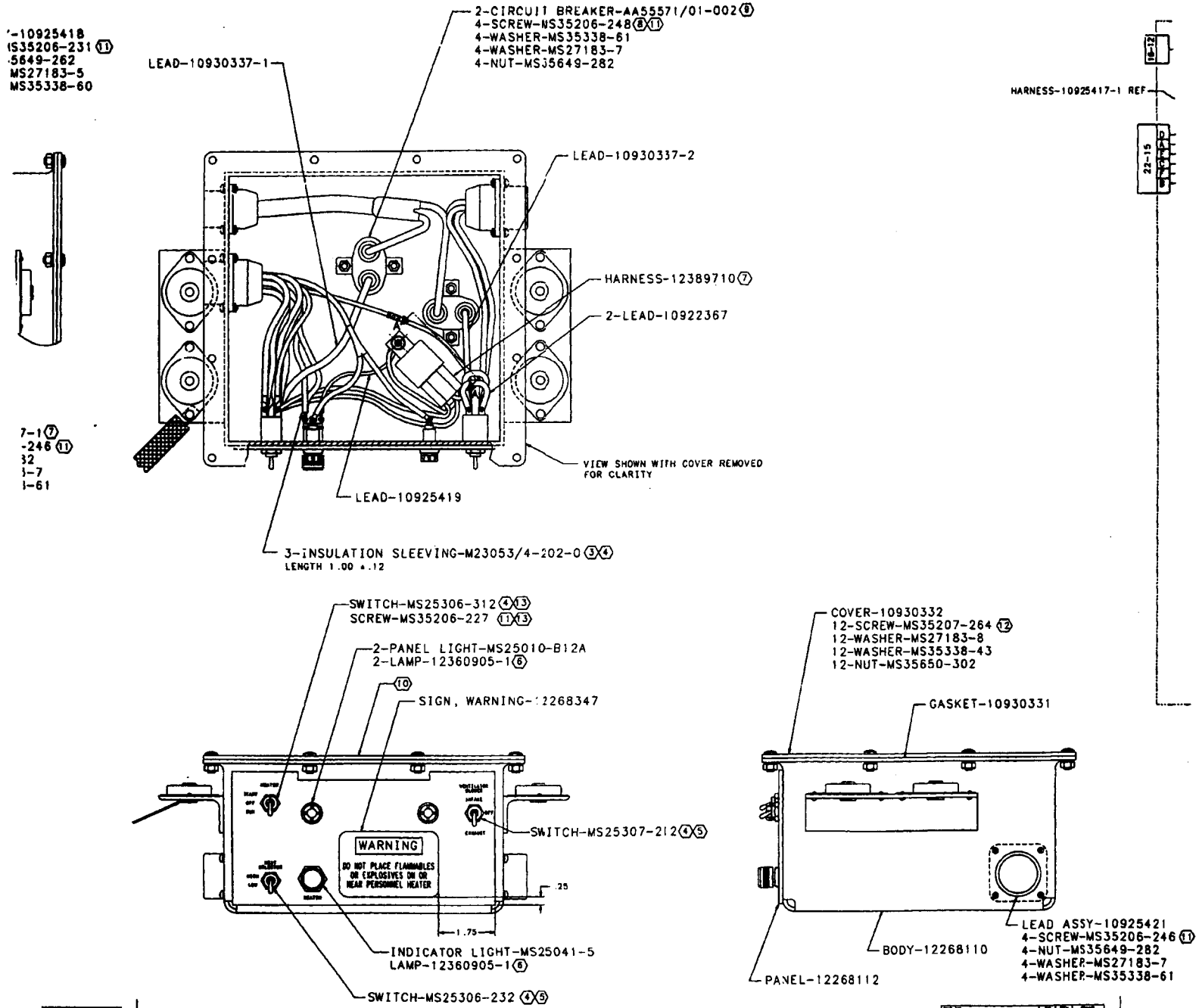
2-CIRCUIT BREAKER-AA55571/01-002 (8)
4-SCREW-MS35206-248 (8)(11)
4-WASHER-MS35338-61
4-WASHER-MS27183-7
4-NUT-MS35649-282
LEAD-10930337-1
LEAD-10930337-2
HARNESS-12389710 (7)
2-LEAD-10922367
VIEW SHOWN WITH COVER REMOVED FOR CLARITY
LEAD-10925419
3-INSULATION SLEEVING-M23053/4-202-0 (3)(4)
LENGTH 1.00 ±.12
HARNESS-10925417-1 REF
SWITCH-MS25306-312 (4)(13)
SCREW-MS35206-227 (11)(13)
2-PANEL LIGHT-MS25010-B12A
2-LAMP-12360905-1 (6)
(10)
SIGN, WARNING-12268347
SWITCH-MS25307-212 (4)(5)
WARNING
DO NOT PLACE FLAMMABLES OR EXPLOSIVES ON OR NEAR PERSONNEL HEATER
.25
1.75
INDICATOR LIGHT-MS25041-5
LAMP-12360905-1 (6)
SWITCH-MS25306-232 (4)(5)
COVER-10930332
12-SCREW-MS35207-264 (12)
12-WASHER-MS27183-8
12-WASHER-MS35338-43
12-NUT-MS35650-302
GASKET-10930331
LEAD ASSY-10925421
4-SCREW-MS35206-246 (11)
4-NUT-MS35649-282
4-WASHER-MS27183-7
4-WASHER-MS35338-61
BODY-12268110
PANEL-12268112
12389712