REVISIONS				
ZONE	REV	DESCRIPTION	DATE	APPROVED
—	—	ALL REVISIONS LISTED ON SH 1	—	—
-	A	THIS SHEET ADDED ERR SSS-U5809	02-04-12	J.NICHOLSON ADJ SEH

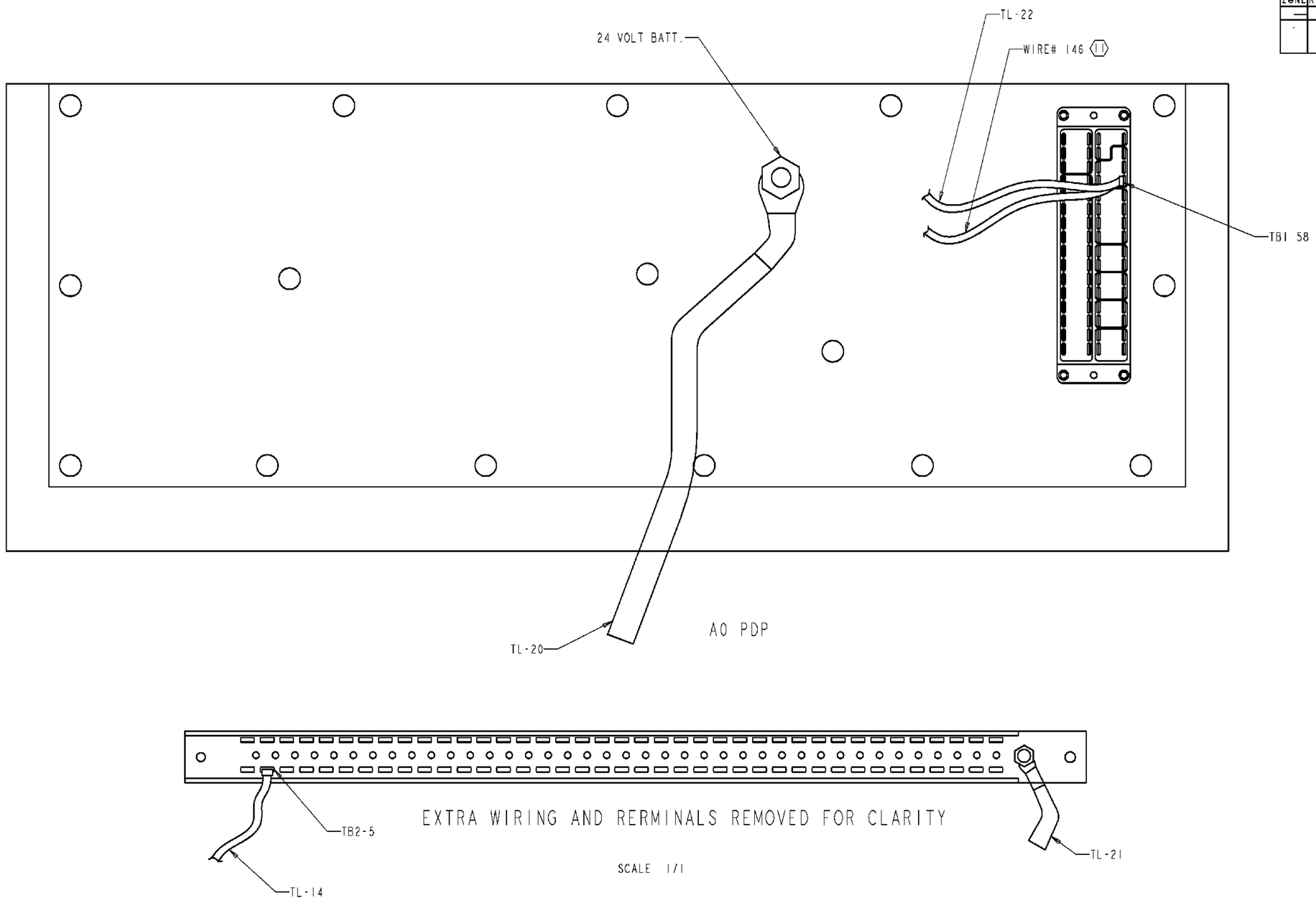

EXTRA WIRING AND RERMINALS REMOVED FOR CLARITY

SCALE 1/1

METRIC

PART NO. 57K2013

DISTRIBUTION STATEMENT A:
APPROVED FOR PUBLIC RELEASE;
DISTRIBUTION IS UNLIMITED.

PMIC A	UNLESS OTHERWISE SPECIFIED DIMENSIONS ARE IN MILLIMETERS TOLERANCES ON 1 PLACE ± 2 PLACE ±	CONTRACT NUMBER DAAE07-99-C-S030 CONTRACTOR STEWART & STEVENSON SERVICES SEALY TEXAS U.S.A.	DESIGN ACTIVITY U.S. ARMY TANK AUTOMOTIVE COMMAND WARREN, MICHIGAN 48397-5000
	THIRD ANGLE PROJECTION	DRAWN BY J. SCHULTZ DATE (YR-MO-DA) 01-08-15	DIGITIZATION, ELECTRICAL, KIT
		CHECKER R. SELBY ENGINEER L. RODNEY	
NEXT ASSY / USED ON	QA PAUL FIESTER	DRAWING APPROVAL - GOV'T AL TAYLOR	SIZE D / CAGE CODE 19207 / DWG NO 57K2013
APPLICATION	MAT'L ENGR MIKE CHURCH	DESIGN APPROVAL - GOV'T AL TAYLOR	SCALE 1/2 / UNIT WT — / SHEET 7

FILE NAME | TACOM-D-METRIC