ZONE	LTR	REVISIONS DESCRIPTION	DATE	APPROVED
	A	REVISION LETTER FOR RELEASE ONLY	[illegible]	C. MGMT
	C	REVISED PER ECN J43630	10/31/84	[illegible]
	E	REVISED PER ECN J43686	[illegible]	[illegible]
	F	REVISED PER ECN J45310	[illegible]	[illegible]
	H	REVISED PER ECN J45329	[illegible]	[illegible]
	K	REVISED PER ECN J-46694	[illegible]	[illegible]
	M	REVISED PER ECN J-46693	[illegible]	[illegible]
	P	REV PER ECP RCA-K2757 (ECN J60720)	6/10/87	[illegible]
	R	REV PER ECP RCA-K2765 (ECN J60747)	3-10-88	[illegible]
	U	REV PER ECP RCA K2768 (ECN J66589)	4/11/88	[illegible]
	V	REV PER ECP RCA-K2769 (J-65752)	11/22/88	[illegible]
	Y	REV PER ECP RCA K2769 (J-65275)	11/22/88	[illegible]
	AB	REV PER ECP RCA K2785, NOR 1 (J68913)	11/22/88	[illegible]
	AC	REV PER ECP RCA-K2790, NOR 6 (J68944)	89-03-10	[illegible]
	AD	REV PER ECP RCA-K2818, NOR 1 (J75951)	90-07-23	[illegible]
	AE	REV PER ECP RCA-K2829, NOR 3 (J75980)	90-06-14	[illegible]
	AG	REV PER ECP RCA-K2835, NOR 1 (J75991)	90-07-26	[illegible]
	AH	REV PER ECP RCA-K2837, NOR 1 (J75992)	90-07-26	[illegible]
	AK	REV PER ECP RCA-K2814 R1 NOR 1 - ECN J80728	91-06-26	[illegible]
	AL	REV PER ECP RCA-K2815 R1 NOR 2 - ECN J80729	91-06-26	[illegible]
	AM	REV PER ECP RCA-K2849, NOR 9, ECN J80751	91-10-09	[illegible]
	AR	REV PER ECP RCA-K2855 NOR 9, AN 07603739	92-10-15	[illegible]
	AT	REVISED PER ECP GEA-R9910, NOR 1 (AN 07603369)	93-06-18	[illegible]
	AU	REVISED PER ECP GEA-R9912, NOR 3 (AN 07603377)	93-12-27	[illegible]
	AV	REVISED PER ECP GEA-R9915, NOR 1. (AN 07603398)	93-12-27	[illegible]
	AW	NOR 1-12 ERR TAC-TI 7733	96-05-15	[illegible]

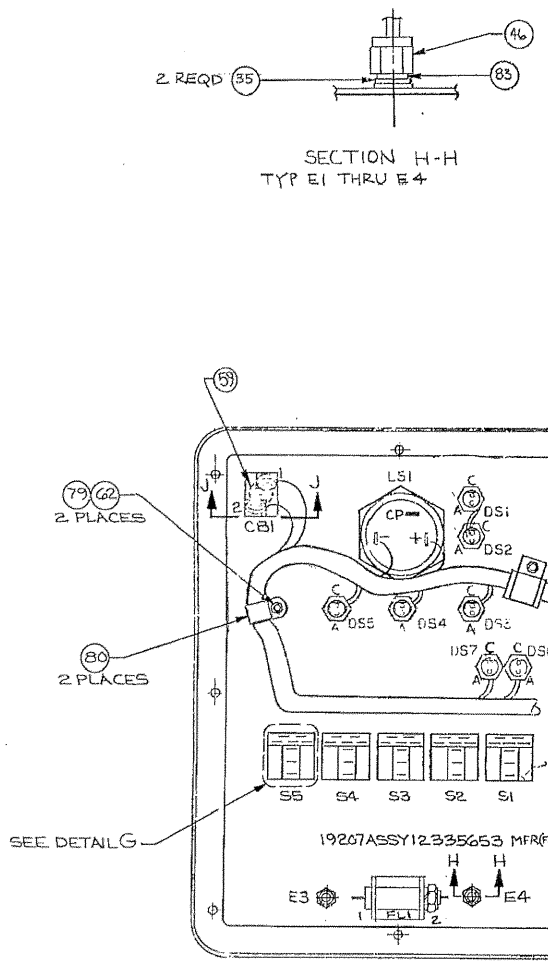

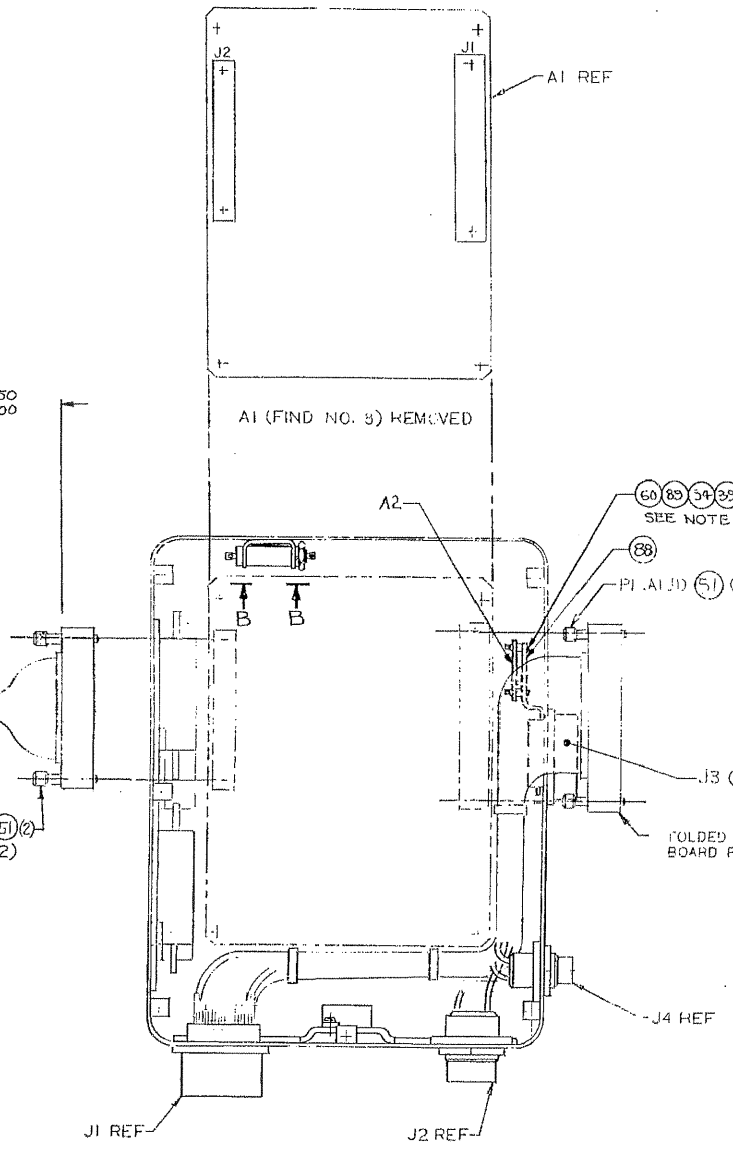

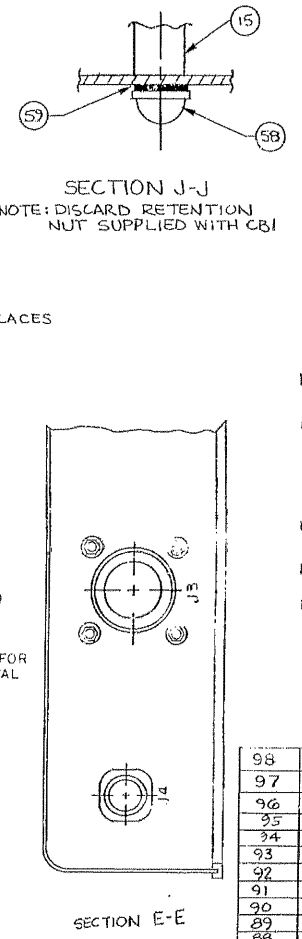

NOTES

CONT FROM SHEET 1 ZONE B-7, B-8.

12. DELETED

13. MOUNT FIND NO. 87 TO FIND NO. 88 WITH A2-E1, E2 AND E3 ON TOPSIDE.

14. SECURE CABLE HARNESS AS SHOWN IN VIEW D-D USING FIND NO. 96.

15. ASSEMBLE FIND NO. 94 TO J4-A, J4-B, J1-F AND J1-P WIRES AT ENTRANCE TO CONNECTOR, 2 EACH WIRE. COVER USING FIND NO. 95. SEE FIG. 1.

16. APPLY FIND NUMBER 91 WITH INFORMATION AS SUPPLIED BY THE PROCURING ACTIVITY TO AREA APPROXIMATELY AS SHOWN.

17. THE GUN SIMULATOR ASSEMBLY SHALL BE INSPECTED IN ACCORDANCE WITH THE REQUIREMENTS OF FIND NO. 96.

FIND NO.	QTY REQ'D	CODE IDENT	PART OR IDENTIFICATION NO	SPECIFICATION	NOMENCLATURE OR DESCRIPTION
98	8		NAS 1523C08B		WASHER, SEALING
97	8		MS51896-14		SCREW, CAPTIVE
96	X	19207	12328453		SPEC FAB, GUN SIMULATOR ASSY
95	A/R	81349	M23053/4-108-0	MIL-I-23053/4	INSULATION SLVG
94	8	19207	12364121		BEAD, FERRITE
93	REF	19207	12364113		PROCEDURE, ACCEPTANCE
92	A/R	96096	MS3367-5-9		STRAP, TIEDOWN
91	1	19207	12335828		LABEL, PROGRAMMING
90					
89	4	80205	NAS1057T0-012		SPACER
88	1	19207	12369084		BRACKET
87	1	19207	12364085		CCA, FILTER
86	A/R		M22759/11-20-9		WIRE, HOOKUP
85	5	19207	NAS671C4		NUT, PLAIN, HEX
84	5	19207	MS35338-135		WASHER, SPLIT LOCKER #4
83	4	19207	MS35338-136		WASHER, SPLIT LOCKER #6
82	X	19207	12364057		INTERCONNECTION DIAGRAM
81	X	96906	MS24515-685		BULB
80	2	96906	MS21919WDG4	MIL-C-8603	CLAMP, CABLE
79	2	96906	NAS1291C3M		NUT, LOCK
78	2	96906	MS35338-134	FF-W-84	WASHER, LOCK
77	1	81349	RER65F2100M	MIL-R-39009	RESISTOR
76	1	19207	12364044-25		PLATE, IDENTIFICATION
75	4	96906	MS27488-20	MIL-C-38999	WIRE SEALING PLUG
74	96	96906	MS27488-22	MIL-C-38999	WIRE SEALING PLUG
73					
72	A/R		M22129 AWG2NAT		TUBING INSULATION
71	A/R		M22129AWG7NAT		TUBING INSULATION
70	A/R	81349	M22129AWG10NAT	MIL-I-22129	TUBING INSULATION
69	A/R		M22759/11-24-9		WIRE HOOKUP #24 AWG

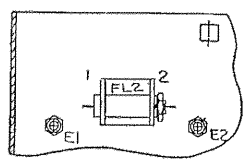

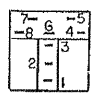

DETAIL G
TYP FOR
S1 THRU S5

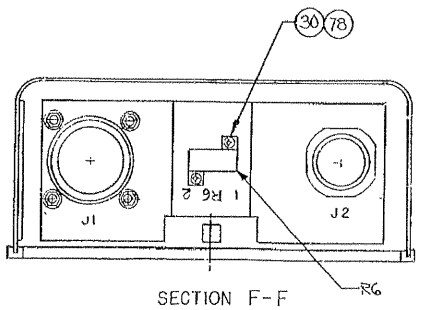

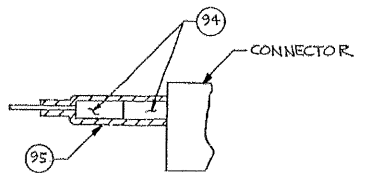

FIG. 1
SCALE: NONE

GEOMETRIC CHARACTERISTICS SYMBOLS

INTERPRET DRAWING IN ACCORDANCE WITH STANDARDS PRESCRIBED BY DOD-STD-100

UNLESS OTHERWISE SPECIFIED DIMENSIONS ARE IN INCHES	CONTRACT NUMBER DAAE07-82-C-4118	PART No. 12335670	U.S. ARMY TANK AUTOMOTIVE COMMAND WARREN, MICHIGAN 48090
TOLERANCES ON: 2 PLACE 3 PLACE ANGLES	CONTRACTOR: RCA Burlington, Mass.		GUN SIMULATOR ASSEMBLY
MATERIAL	DRAWN BY [illegible] DATE 7/24/84		
	CHECKED BY [illegible] ENGINEER [illegible]		
SEE ENGINEERING RECORDS	DRAWING APPROVAL [illegible]	SIZE E	CODE IDENT. NO. 19207 — 12335670
NEXT ASSY / USED ON	DESIGN APPROVAL [illegible]	SCALE 1/1	UNIT WT. — SHEET 2 OF 2
APPLICATION	MATL ENGRG		

1076