REVISIONS				
ZONE	LTR	DESCRIPTION	DATE	APPROVED
		SEE ECP NO. 0214-1 R2	03-11-24	KMO

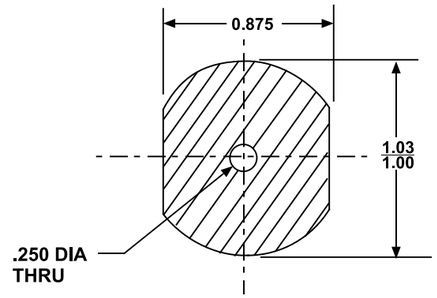

SECTION A-A

NOTES:
1. MATERIAL: GREY PVC ROD I.A.W. ASTM D 1784 Type 2

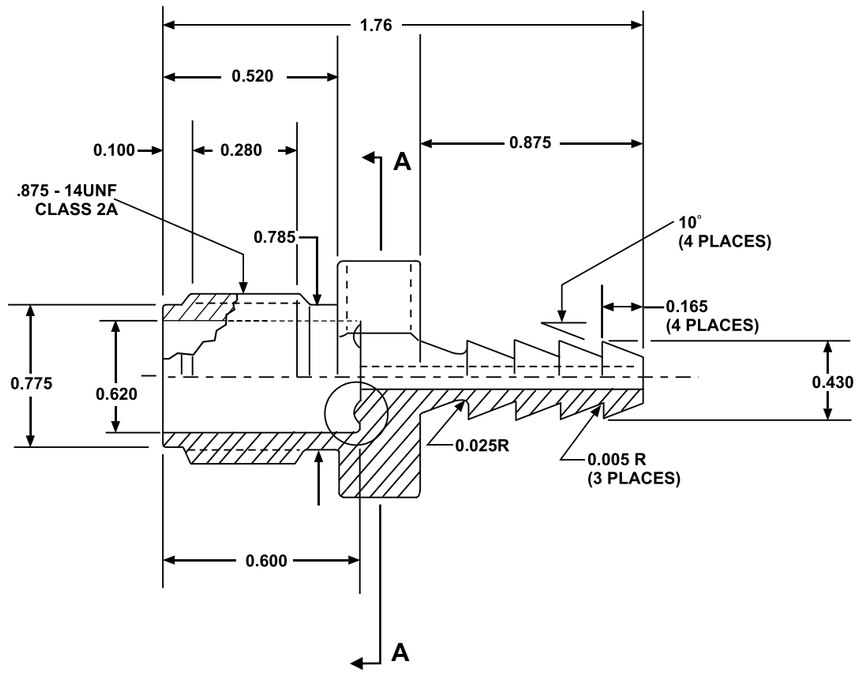

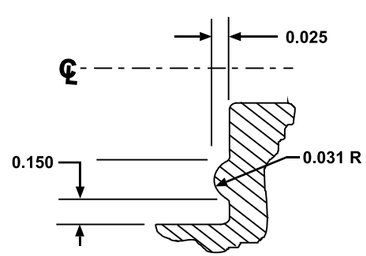

DETAIL - B

UNLESS OTHERWISE SPECIFIED DIM/TOLERANCES ARE: mm IN.
ONE PLACE [.X] ± ___
TWO PLACE [.XX] ± .03
THREE PLACE [.XXX] ± .010
ANGLES ± ___
THIRD ANGLE PROJECTION

DO NOT SCALE THIS DRAWING

FOR INTERPRETATION OF DRAWING DOD-STD-100 APPLIES

REMOVE BURRS AND BREAK SHARP EDGES
SHARP EDGES ___ TO ___
FILLET RADII .005 TO .010

DRAWN BY J. MOORE	DATE 03-11-24
CHECKED BY R. FRIGON	03-11-24
CONTRACT NO. DAAE07-03-D-S011/0001	
DESIGN APPROVAL	
APPROVED FOR PROCUREMENT DATE 03-11-24	

U.S. ARMY MOBILITY EQUIPMENT
RESEARCH AND DEVELOPMENT CENTER
FORT BELVOIR, VIRGINIA 22060

BARBED FITTING

SIZE	CAGE CODE	
	97403	12492392
SCALE		SHEET