REVISIONS				
ZONE	LTR	DESCRIPTION	DATE	APPROVED
		SEE ECP NO. 0214-1 R2	03-11-24	KMO
	A	SEE ECP NO. TACU-8644.	05-02-04	KMO

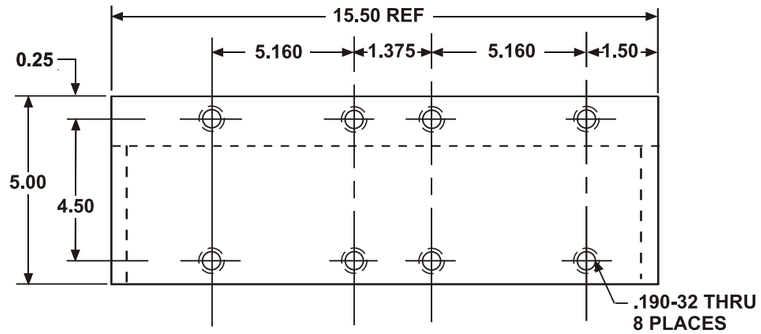

NOTES:

1. WELD IN ACCORDANCE WITH AWS D1.2
2. TREAT AND PAINT IAW MIL-C53072. TOPCOAT MAY BE IAW MIL-DTL-64159 (MANUFACTURERS SPECIFICATIONS) OR MIL-C-53072.

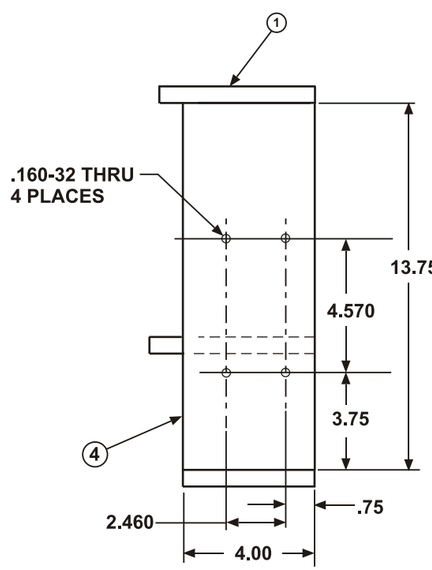

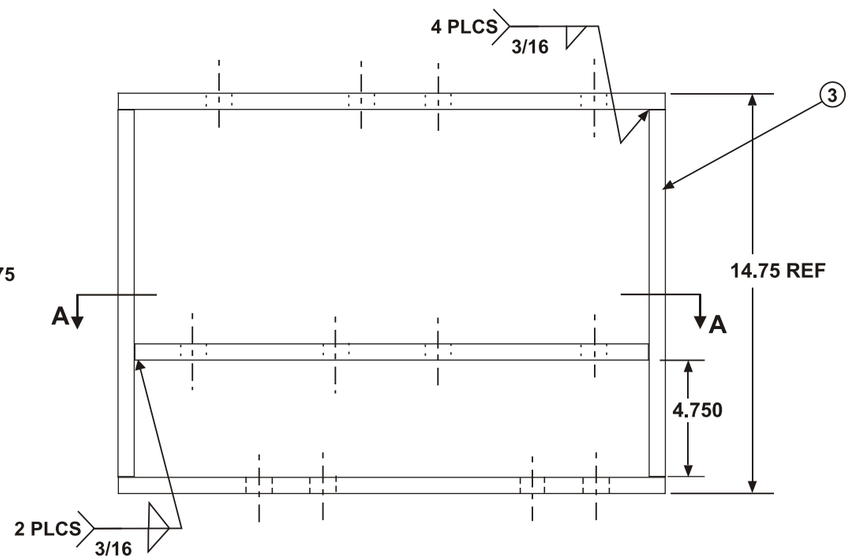

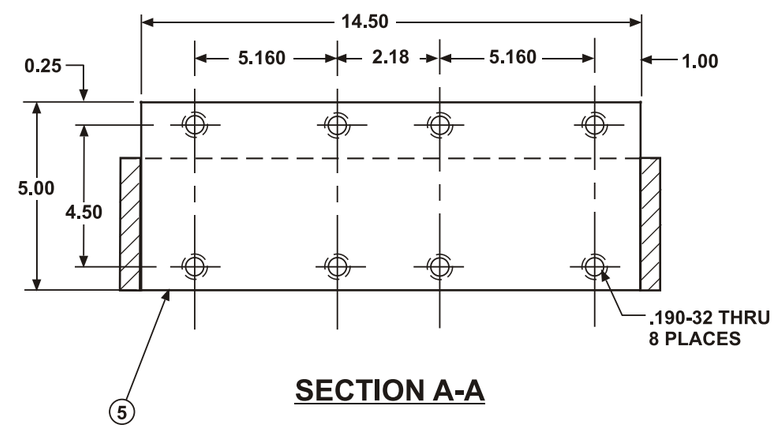

SECTION A-A

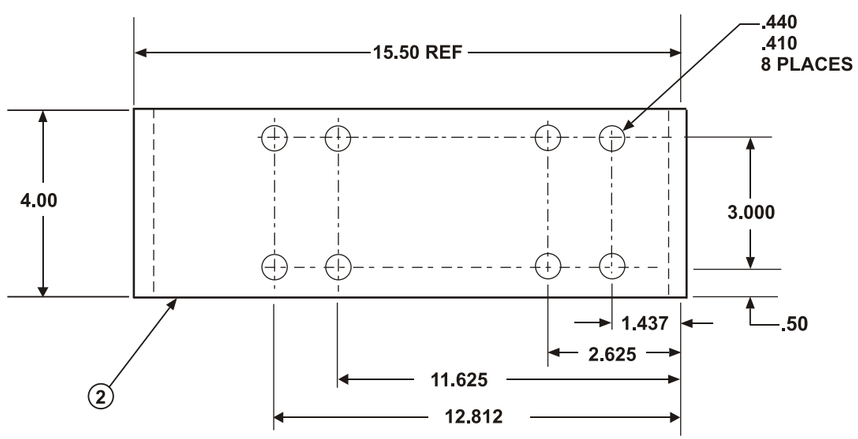

FIND NO.	CODE	PART OR IDENTIFYING NO.	QTY REQD	NOMENCLATURE OR DESCRIPTION	SPECIFICATION	MATERIAL
5	97403	ALY 6061-T6	1	PLATE, .500 STK	ASTM B209	AL ALY
4	97403	ALY 6061-T6	1	PLATE, .500 STK	ASTM B209	AL ALY
3	97403	ALY 6061-T6	1	PLATE, .500 STK	ASTM B209	AL ALY
2	97403	ALY 6061-T6	1	PLATE, .500 STK	ASTM B209	AL ALY
1	97403	ALY 6061-T6	1	PLATE, .500 STK	ASTM B209	AL ALY

PARTS LIST

UNLESS OTHERWISE SPECIFIED DIM/TOLERANCES ARE: mm IN.
ONE PLACE [.X] = .03
TWO PLACE [.XX] = .010
THREE PLACE [.XXX] = .005
ANGLES = ±
THIRD ANGLE PROJECTION

DO NOT SCALE THIS DRAWING

FOR INTERPRETATION OF DRAWING DOD-STD-100 APPLIES

REMOVE BURRS AND BREAK SHARP EDGES
SHARP EDGES ____ TO ____
FILLET RADII ____ TO ____

DRAWN BY J. MOORE DATE 03-11-24
CHECKED BY R. FRIGON DATE 03-11-24
CONTRACT NO. DAAE07-03-D-S011/0001
DESIGN APPROVAL
APPROVED FOR PROCUREMENT
DATE 03-11-24

U.S. ARMY MOBILITY EQUIPMENT RESEARCH AND DEVELOPMENT CENTER
FORT BELVOIR, VIRGINIA 22060

STAND, CHEMICAL FEED PUMP

SIZE M2 | CAGE CODE 97403 | 12492389

SCALE | SHEET 1 OF 1

12492389