REVISION				
ZONE	REV	DESCRIPTION	DATE	APPROVED
–	–	PRODUCT BASELINE ERR TA57K1764–	96/12/20	SCOTT NIER
–	B	SEE ECP NO. RAD–B1002	97/12/23	A. SCHUTT
A7	C	6)ADDED OPTIONAL CONSTRUCTION VIEW ERR TACU6743	2004–07–08	D.STANDISH ADJ SEH

CAD MAINTAINED. CHANGES SHALL BE INCORPORATED BY THE DESIGN ACTIVITY.

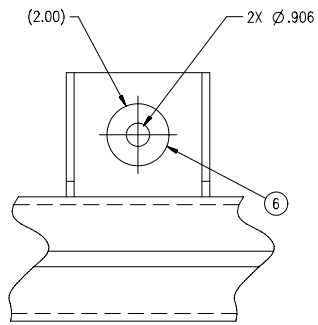

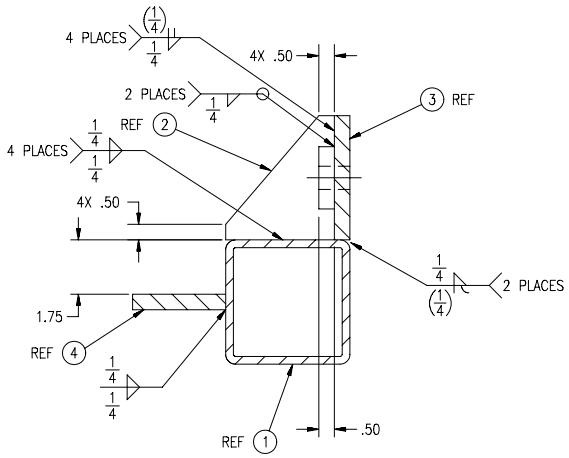

SECTION A–A
(SH 1, ZONE C–5)
SCALE 1/2
ROTATED 90° CCW
ITEMS NOT SHOWN
OMITTED FOR CLARITY

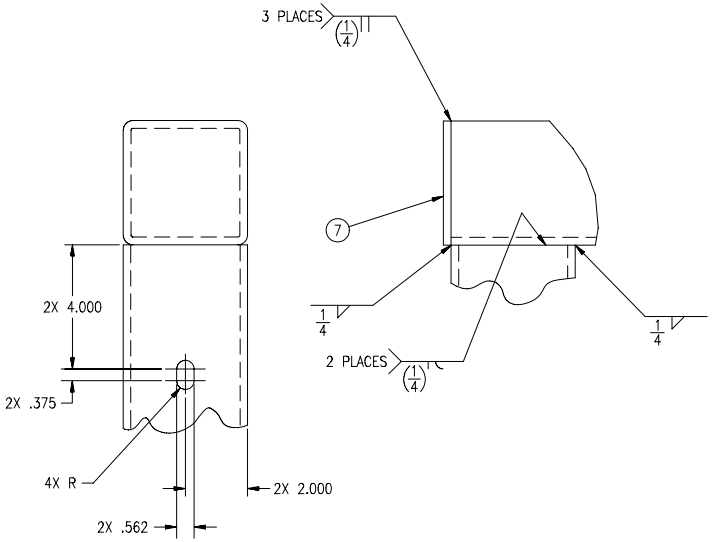

VIEW B–B
(SH 1, ZONE B–6)
SCALE 1/2
ITEMS NOT SHOWN
OMITTED FOR CLARITY

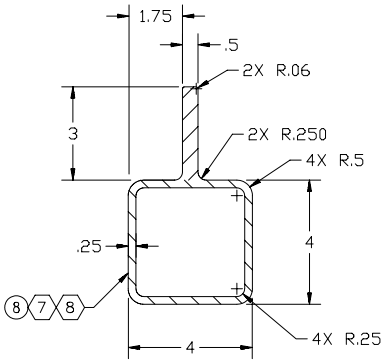

OPTIONAL CONSTRUCTION 1 4 7

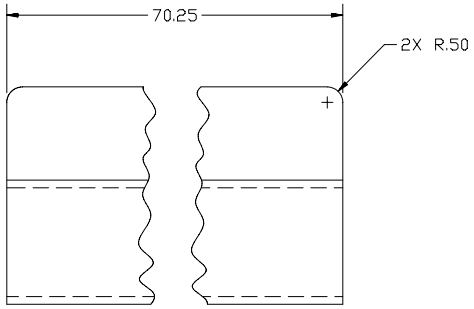

DISTRIBUTION STATEMENT A.
APPROVED FOR PUBLIC RELEASE;
DISTRIBUTION IS UNLIMITED.

		UNLESS OTHERWISE SPECIFIED DIMENSIONS ARE IN INCHES	CONTRACT NUMBER DAAK70–92–D–0004	U.S. ARMY TANK AUTOMOTIVE COMMAND WARREN, MICHIGAN 48397–5000
		TOLERANCES ON: 2 PLACES ± 3 PLACES ± ANGLES ±	CONTRACTOR RADIAN INC ALEXANDRIA, VIRGINIA	
		QA AUDIT	DRAWN BY N. MUNRO DATE 96–05–10 CHECKER ENGINEER	BAR, RETAINING
		DESIGN MANAGER/LEADER	DRAWING APPROVAL SCOTT L. NIER	SIZE D CAGE CODE 19207 12463648
SEE ENGINEERING RECORDS		MATL ENGR	DESIGN APPROVAL PAUL L. PROPST	SCALE UNIT WT SHEET 2
NEXT ASSY	USED ON			
APPLICATION				

DWG NO. 12463648 SH 2