REVISIONS				
ZONE	LTR	DESCRIPTION	DATE (YR-MO-DY)	APPROVED
	H	NOR BRI-U0375 THIS SHEET ADDED	02-11-19	ED

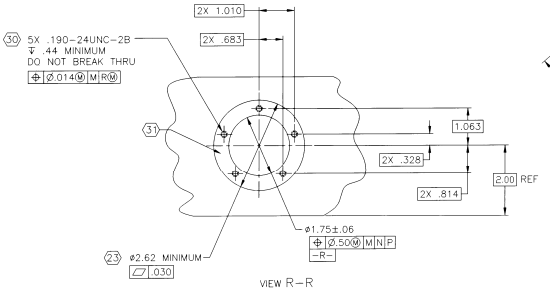

VIEW R-R
SCALE 1/1

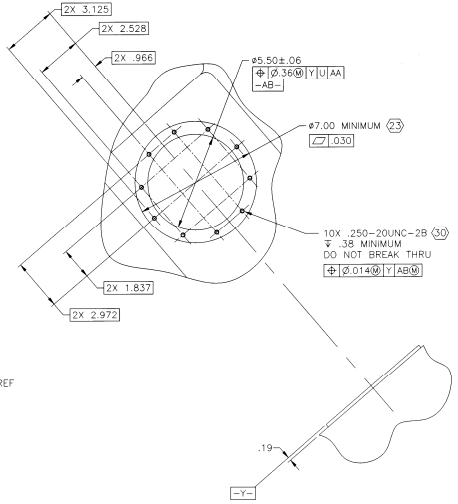

DETAIL T
SCALE 1/2

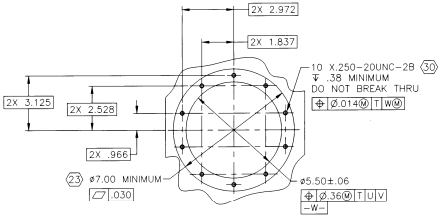

DETAIL M
SCALE 1/2
SH 4, D2

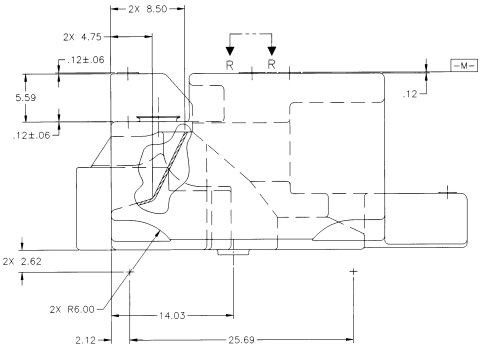

VIEW P-P
SH 5, B8

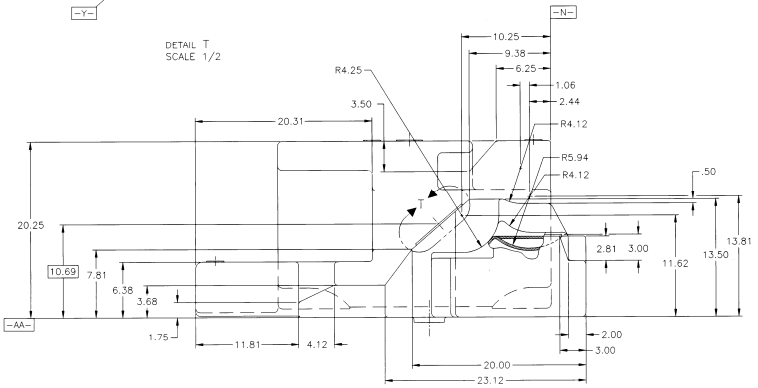

VIEW N-N
SH 5, B4

DISTRIBUTION STATEMENT A.
APPROVED FOR PUBLIC RELEASE;
DISTRIBUTION IS UNLIMITED.

PART NO. 12361460

UNLESS OTHERWISE SPECIFIED: DIMENSIONS ARE IN INCHES TOLERANCES ON 2 PLACES ± — 3 PLACES ± —	CONTRACT NUMBER DAAA21-86-C-0023 CONTRACTOR BMY DIV OF HARSCO CORP YORK, PA 17405-1912	DESIGN ACTIVITY U.S. ARMY TANK-AUTOMOTIVE AND ARMAMENTS COMMAND WARREN, MICHIGAN 48397-5000	FUEL TANK, LOWER
	DRAWN BY UNY — DATE(YR-MO-DY) 88-09-02		
	CHECKER DB — ENGINEER KENNETH V. URDO		
SEE SHEET 1	DRAWING APPROVAL MATRA N. NESTOROVICH	SIZE E — CAGE CODE 19207	12361460
NEXT ASSY — USED ON	MATL ENGR R.E. WAHLSTROM	DESIGN APPROVAL ANTHONY GLOVER	SCALE 1/4 — UNIT WT — — SHEET 6
APPLICATION			