September 22, 2003 12:45 AM

NOTES:
1. INTERPRET DRAWING IN ACCORDANCE WITH STANDARDS PRESCRIBED BY DOD-STD-100
2. PRECIOUS METALS INDICATOR CODE: PMIC, A
3. FUNCTIONAL REQUIREMENTS:
   3.1 ALL NEW OR OVERHAULED FUEL INJECTION PUMP ADVANCE UNIT ASSEMBLIES MUST BE CHECKED ON A 10898925 TEST BENCH TO VERIFY THE ADVANCE CHARACTERISTICS IN ACCORDANCE WITH THE APPROVED ADVANCE UNIT CURVE LIMITS SHOWN.
   3.1.1 CONDITIONS OF TEST:
   OIL: SAE 30, 200°F ± 5°F
   OIL PRESSURE: 80 PSI ± 2 PSI AT SPEEDS OF 1400 RPM & ABOVE
   FUEL SUPPLY PRESSURE: 40 PSI, +5PSI-0PSI
   FUEL INJECTION PUMP - FULL RACK - 230 MM³
   3.2 ALL TEST AND QUALIFICATION REQUIREMENTS OF THE DETAIL COMPONENTS APPLY TO THIS ASSEMBLY.
4. QUALITY ASSURANCE REQUIREMENTS (QAR) APPLY TO THIS DRAWING. (QAR NO. SAME AS PART NO.)

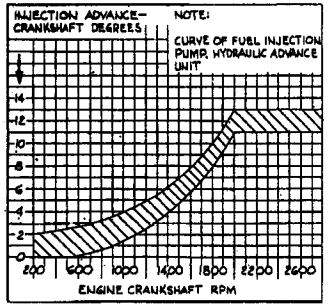

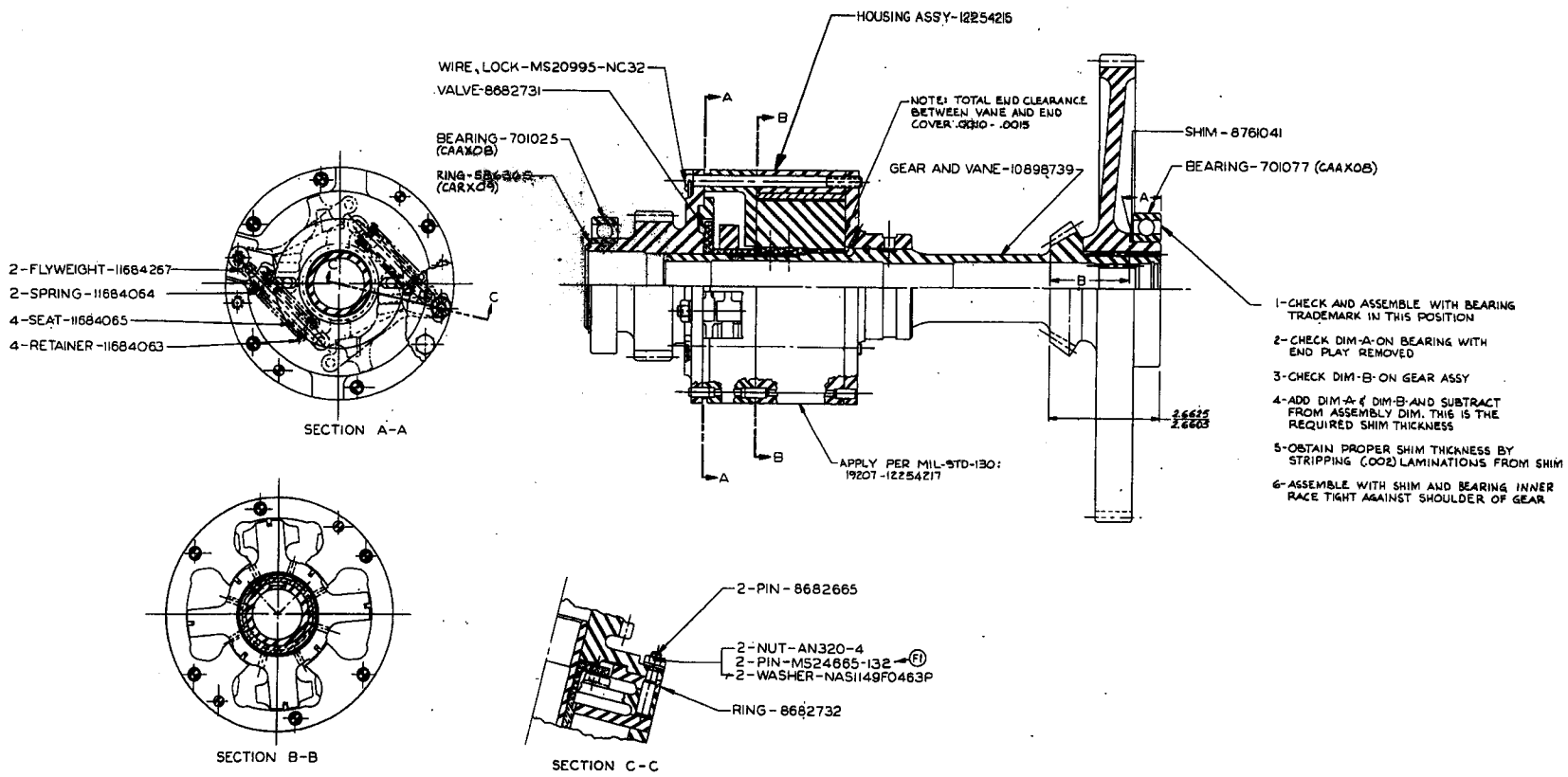

REVISIONS				
ZONE	LTR	DESCRIPTION	DATE	APPROVED
	E	REDRAWN WITH CHNG WAS F SIZE (1) REMOVED SUPPLIER QUALIFICATION NOTE (2) ADDED NOTE 2 (3) REVISED NOTE 3 (4) WAS MIL-STD-100. QAR AFFECTED (CO-19982)	7-10-84	
	F	(1) NAS MS24665-154 QAR NOT AFFECTED (CO-11167)	7-18-86	
	G	(1) REVISED CURVE QAR NOT AFFECTED (CO-19528)	5-1-87	
	H	(1) DELETED 7-SEAL-10898643 (2) DELETED 8-SPRING 10898650 (3) DELETED 6-BOLT-10898746 QAR NOT AFFECTED (CC M6175)		
	J	(1) REVISED NOTE 3.1.1-QAR NOT AFFECTED (CO-19536)		
	K	(1) 2-NAS1149F0463P NAS 2-AN960-416 (CO-19832) QAR NOT AFFECTED	97-10-25	

PART NO. 12254217

CONTRACT NUMBER	DAAE07-76-C-0256
CONTRACTOR	WILLIAMS CONTROLS INDUSTRIES Subsidiary of Kidde Minneapolis, Minn.
MATERIAL	
DRAWN	7-25-76
CHECKED	
DRAWING APPROVAL	
DES ENGINEERING REVIEWER	
PART NUMBER	
SIZE	CODE IDENT. NO.
E	19207
SCALE	1/1
SHT	OF

U.S. ARMY TANK AUTOMOTIVE COMMAND
WARREN, MICHIGAN 48090

ADVANCE ASSEMBLY, AUTOMATIC INJECTION

12254217