ZONE	REV	REVISION DESCRIPTION	DATE	APPROVED
	—	PRODUCT BASELINE ERR AMG R8436	93-10-01	JS
G8 G5 C5 A8 E8	A	(1)REV NOTE 2 (2)DIM 1986.0/1974.0 WAS 2420.0/2396.0, 2PL (3)RMV QAP NOTE (4)REV NOTE 8 ERR GDS U4460	02-11-02	JB

NOTES:

1. APPLICABLE STANDARDS/SPECIFICATIONS:
   A. DOD-STD-00100D (AR)
   B. ANSI Y14.5M-1982

(2) MATERIAL:
WIRE ROPE, 0.75 DIA, 6X41 STRAND ONLY
EXTRA IMPROVED PLOW (XIP)
IWRC RIGHT REGULAR LAY (RRL)
FOR MORE FLEXIBILITY.
WIRE ROPE TO BE OF U.S.
MANUFACTURE ONLY.
COMMERCIAL GRADE

(3) THIMBLE, TYPE III, SIZE .750,
IAW FF-T-276

(4) SCREW PIN ANCHOR SHACKLE
IAW RR-C-271, TYPE IVA,
GRADE B, CLASS 2, 1 1/8 NOMINAL SIZE

5. WIRE ROPE ASSEMBLY SHALL WITHSTAND
A LINE PULL OF 39,000-41,000 LB

6. FINISH: (EXCEPT WIRE ROPE)
CLEAN AND TREAT TYPE I OR III
IAW TT-C-490, PRIMER IAW MIL-P-53022
OR MIL-P-53030, DRY FILM THICKNESS 0.8
TO 1.5 MILS, TOPCOAT, GREEN 383, IAW
MIL-C-46168 OR MIL-C-53039,
DRY FILM THICKNESS 1.8 MILS MIN

(7) ITEM IDENTIFICATION: METAL STAMP
OR ENGRAVE THE FOLLOWING
MARKINGS IAW MIL-STD-130
19207ASSY12412159
MFR-[ ]
MANUFACTURER'S CAGE CODE

(8) WIRE ROPE SLEEVE
IAW A-A-52540, TYPE II
.750 SIZE

(9) CABLE END SHALL BE VISIBLE THRU
INSPECTION HOLE WHEN ASSEMBLED.

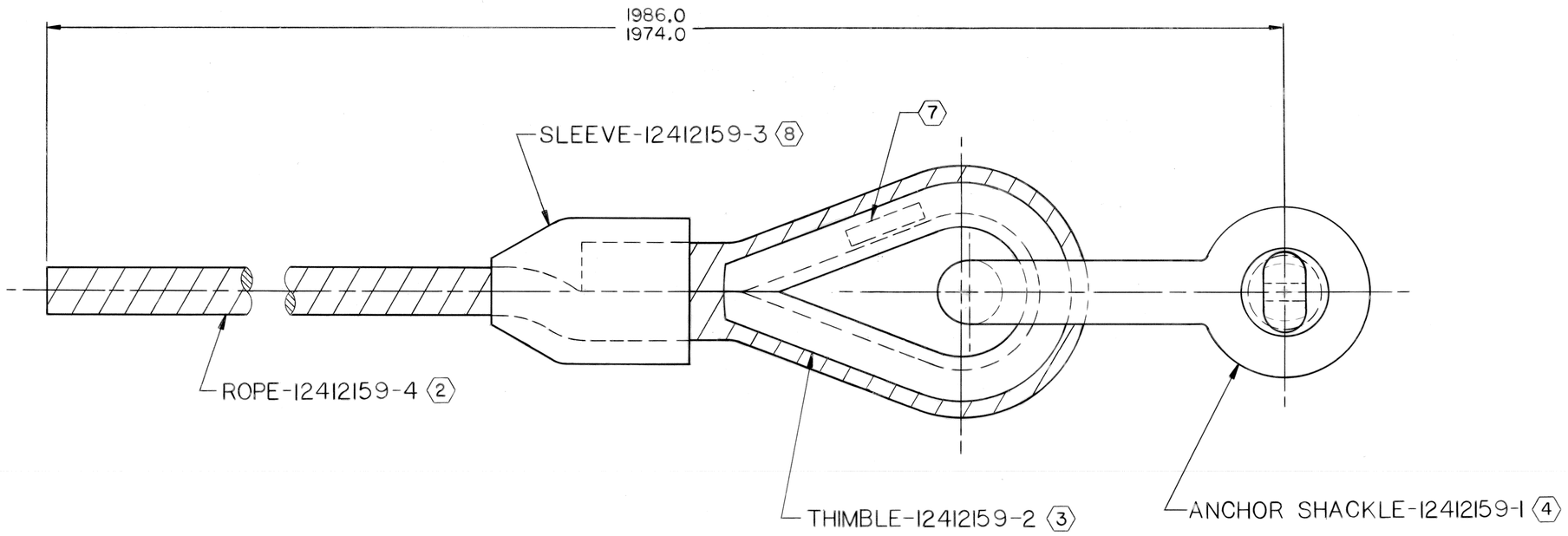

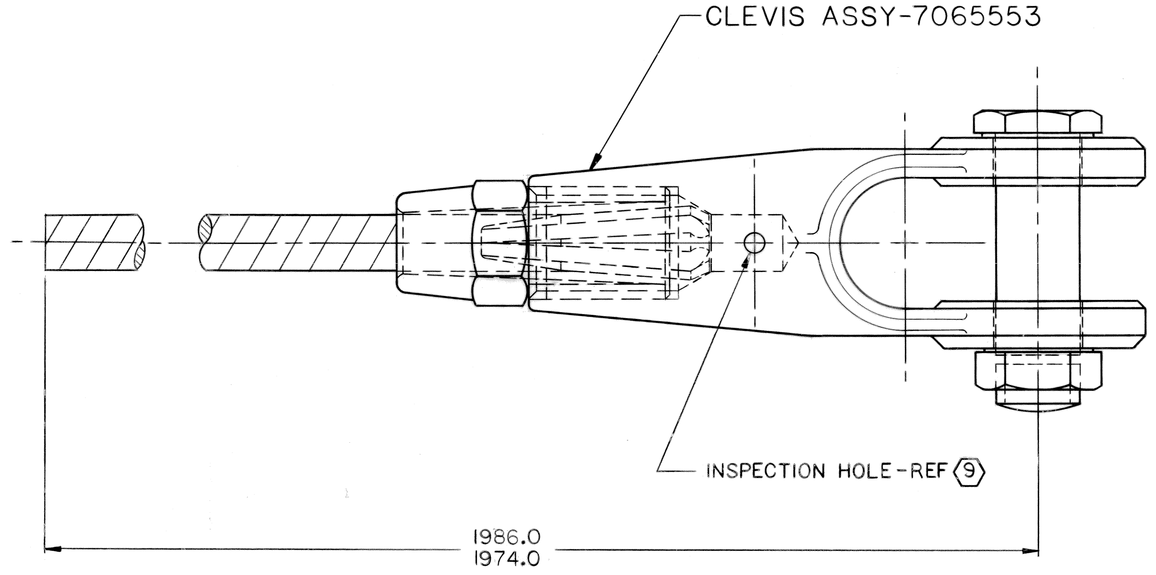

OPTIONAL DESIGN

PART NO. 12412159

PMIC A	UNLESS OTHERWISE SPECIFIED: DIMENSIONS ARE IN INCHES TOLERANCES ON 2 PLACE ± — 3 PLACE ± —	CONTRACT NUMBER DAAE07-90-C-R056 CONTRACTOR AM General Corp. ENGINEERING & TECHNICAL SERVICES DIV. LIVONIA, MICHIGAN	DESIGN ACTIVITY U.S. ARMY TANK-AUTOMOTIVE COMMAND WARREN, MICHIGAN 48397-5000
	QA AUDIT B.WOLKAN 93-04-29	DRAWN BY DATE (YR-MO-DA) 93-02-12 CHECKER ENGINEER	WIRE ROPE ASSY
12412178 / M9 ACE NEXT ASSY / USED ON APPLICATION	DESIGN MANAGER/LEADER P.A. 93-03-31 MATL ENGR 93-03-18	DRAWING APPROVAL 93-05-04 DESIGN APPROVAL 93-4-29	SIZE E / CAGE CODE 19207 / 12412159 SCALE 1/1 / UNIT WT — / SHEET —

12412159