SOURCE CONTROLLED		
SUPPLIER DATA		
CAGE CODE	PART NUMBER	NAME AND ADDRESS
3Z940	BS.2803.00.00.000 SEE NOTE 1	ISRAEL AIRCRAFT INDUSTRIES LTD RAMTA-STRUCTURES AND SYSTEMS MARKETING DEPT 50 W 23RD ST NEW YORK CITY NY 10010 OR MINOWITZ MANUFACTURING CO. 27941 GROESBECK HWY. ROSEVILLE, MI 48066

STATUS OF REVISIONS

ZONE	LTR	DESCRIPTION	DATE	APPROVED
	–	SEE ECP NO. 92HE3261	92-9-18	AG
	A	SEE ECP NO. 94HE3239	94-11-9	AG
	B	SEE ECP NO. U6775	03-2-20	PK
	C	SEE ECP NO. U8452	04-1-12	PK

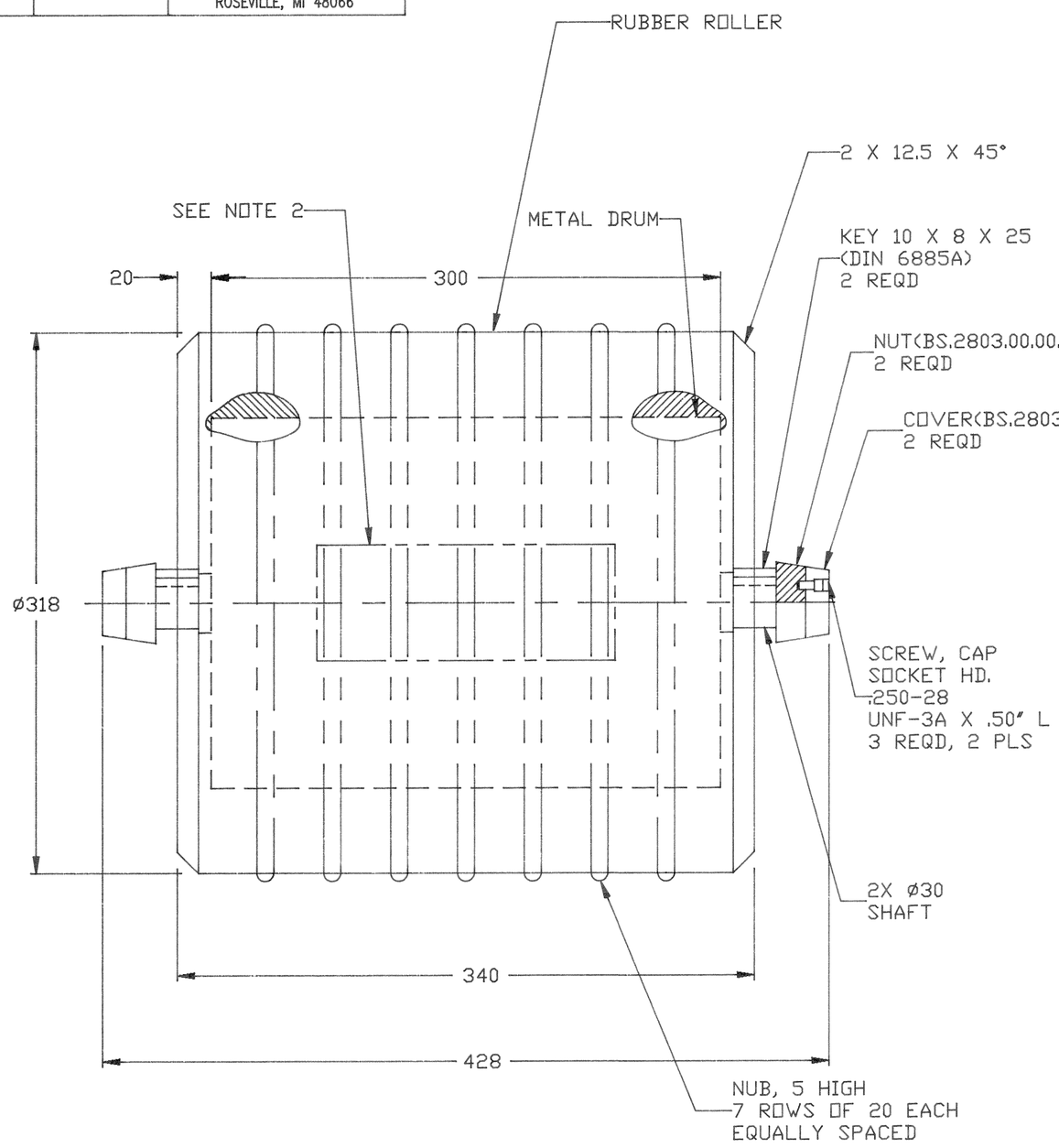

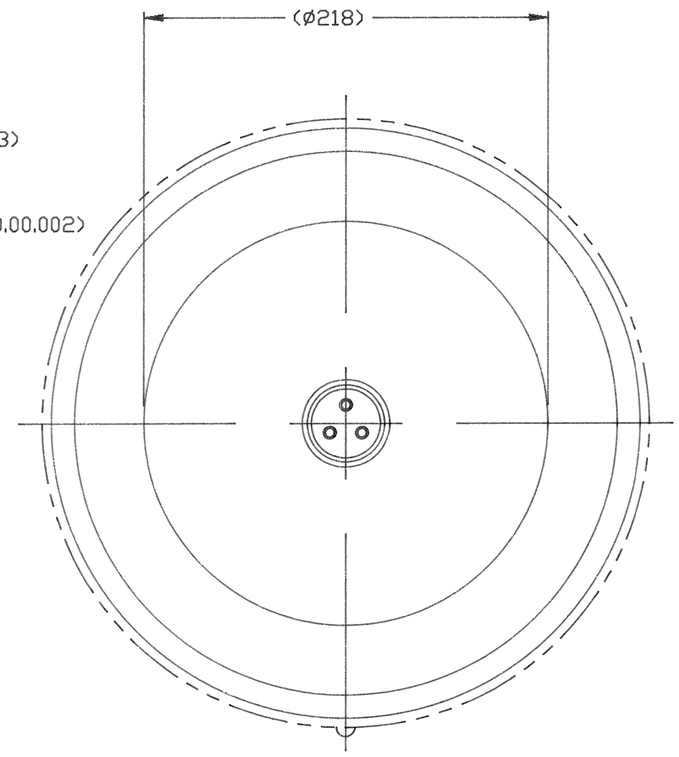

NOTES:

1. THIS ITEM IS PATENTED BY:
   ISRAEL AIRCRAFT INDUSTRIES LTD
   RAMTA-STRUCTURES AND SYSTEMS
   50 W 23RD STREET
   NEW YORK, NY 10010

2. STENCIL "CAUTION THIS ITEM WEIGHTS 125 LBS, 2 PERSON LIFT IS REQUIRED." IN 25 (1.00 IN.) HIGH CHARACTERS USING BLACK EPOXY PAINT IN ACCORDANCE WITH MIL-P-24441/23.

3. IDENTIFICATION OF THE SUGGESTED ITEMS HEREON IS NOT TO BE CONSTRUED AS A GUARANTEE OF PRESENT OR CONTINUED AVAILABILITY.

METRIC

DISTRIBUTION STATEMENT A.
APPROVED FOR PUBLIC RELEASE;
DISTRIBUTION IS UNLIMITED.

UNLESS OTHERWISE SPECIFIED DIM/TOLERANCES ARE: mm ~IN.~ ONE PLACE (.X) ± — TWO PLACE (.XX) ± — THREE PLACE (.XXX) ± — ANGLES ± — THIRD ANGLE PROJECTION	DRAWN BY PK	DATE 92-4-30	U.S. ARMY BELVOIR RESEARCH, DEVELOPMENT, AND ENGINEERING CENTER FORT BELVOIR, VIRGINIA 22060-5606
	CHECKED BY PK	01-7-20	
DO NOT SCALE THIS DRAWING	CONTRACT NO. DAA70-89-D-0066	2R341	DOGBONE, IMPROVED
FOR INTERPRETATION OF DRAWING MIL-STD-100 APPLIES	DESIGN APPROVAL HAROLD RANSLEM		
REMOVE BURRS AND BREAK SHARP EDGES — SHARP EDGES — TO — FILLET RADII — TO —			
MATERIAL –	APPROVED FOR PROCUREMENT JOHN ALLISON		SIZE A1 / CAGE CODE 97403 / DWG NO. 13230E3625
			SCALE — / SHEET 1 OF 1