REVISIONS					
ZONE	LTR	DESCRIPTION	DATE (YR-MO-DA)	APPROVED	
	R	REDRAWN W/O CHANGE BRI-U0397	01-02-28	ED	RPJ
	T	REV NOTES 5, 6 & ADDED DISTR STMT A BRI-U0401	02-05-14	ED	RPJ

NOTES:

1. APPLICABLE STANDARDS/SPECIFICATIONS:
   A. DOD-STD-00100D(AR)
   B. ANSI Y14.5M-1982

(2) MATERIAL: BRASS IN ACCORDANCE ASTM B16, UNS NO. C36000, TEMPER H02.

(3) FINISH: SILVER PLATE IN ACCORDANCE WITH QQ-S-365, TYPE III, GRADE B, .00015 MIN THICK.

(4) MATERIAL AND FINISH ANY OF THE FOLLOWING:
   A. ANODIZED DIE CAST ALUMINUM.
   B. ANODIZED ALUMINUM BAR STOCK.
   C. CADMIUM PLATED STEEL (PLATING TO WITHSTAND 200 HOURS SALT SPRAY IN ACCORDANCE WITH MIL-STD-202).

5. FOR WATERPROOF REQUIREMENTS, REFER TO MIL-HDBK-1184. THE UNIT SHALL SHOW NO EVIDENCE OF LEAKAGE AND SHALL BE MECHANICALLY AND ELECTRICALLY OPERABLE DURING AND SUBSEQUENT TO SUBMERSION, WHEN SUBJECTED TO THE TESTS SPECIFIED FOR TYPE II, CLASS 1.

(6) APPLY A THOROUGH COATING OF ANTI-CORROSION SILICONE COMPOUND, SPEC SAE AS8660, TO SOCKET BEFORE INSTALLING LED OR LAMP.

7. ORIENTATION OF SUBASSEMBLIES IS SHOWN FOR REFERENCE ONLY.

(8) DOES NOT MEET INFRARED LIGHT EMISSION REQUIREMENTS FOR SECURE LIGHTING.

(101 V) 9. WARNING LIGHT SHALL BE INSPECTED FOR COMPLETENESS OF ASSEMBLY OF UNIT.

(102 C) 10. CONTINUITY TEST: APPLY 28.00±.25 VDC TO THE LIGHT TERMINALS USING SUITABLE MATING CONNECTOR, BULB MUST ILLUMINATE.

(103 C) 11. SHORT TEST - COLD READING: USING AN OHMMETER, CONNECT ONE LEAD DIRECTLY TO EITHER OF THE TWO STAINLESS STEEL HOUSING SCREWS AND THE OTHER LEAD TO EITHER ONE OF THE TWO ELECTRICAL TERMINALS. RESISTANCE MUST BE 2 MEG OHMS MINIMUM.

(104 V) (12) SURFACE FINISH OF INDICATED PARTS SHALL BE INSPECTED FOR ADHERENCE, COVERAGE AND WORKMANSHIP.

(105 V) (13) SILVER PLATING OF PINS SHALL BE INSPECTED FOR ADHERENCE, COVERAGE AND WORKMANSHIP.

14. ONLY THE ITEM DESCRIBED ON THIS DRAWING WHEN PROCURED FROM THE VENDOR(S) LISTED HEREON IS APPROVED BY U.S. ARMY TANK-AUTOMOTIVE AND ARMAMENTS COMMAND (TACOM), WARREN, MI, 48397-5000 FOR USE IN THE APPLICATION(S) SPECIFIED HEREON. A SUBSTITUTE ITEM SHALL NOT BE USED WITHOUT PRIOR APPROVAL BY TACOM.

15. IDENTIFICATION OF THE APPROVED SOURCE(S) OF SUPPLY HEREON IS NOT TO BE CONSTRUED AS A GUARANTEE OF PRESENT OR CONTINUED AVAILABILITY AS A SOURCE OF SUPPLY FOR THE ITEM DESCRIBED ON THE DRAWING.

(16) ITEM IDENTIFICATION: STAMP ON DECAL THE FOLLOWING MARKINGS IN ACCORDANCE WITH MIL-STD-130, CHARACTERS SHALL BE .09-.19 HIGH.

"19207SDCN ____ "
MFR- ____

APPROPRIATE PART NO.

MANUFACTURER'S CAGE CODE, SHALL BE THAT OF THE PRIME CONTRACTOR (NOT SUBCONTRACTOR) CONTRACTUALLY RESPONSIBLE FOR FURNISHING THIS ITEM TO THE GOVERNMENT.

17. QUALITY ASSURANCE PROVISIONS:
PRODUCTION QUALITY CONTROL REQUIREMENTS ARE IDENTIFIED ON THIS DRAWING AS FOLLOWS:

CLASSIFICATION NUMBER
1 THRU 99 - CRITICAL
101 THRU 199 - MAJOR

METHOD OF INSPECTION
S - SPECIAL INSPECTION EQUIPMENT
C - COMMERCIAL INSPECTION EQUIPMENT
V - VISUAL

QUALITY CONFORMANCE INSPECTION SHALL CONSIST OF THOSE CHARACTERISTICS CLASSIFIED AS CRITICAL AND/OR MAJOR. MINIMUM ACCEPTABLE CONTROL METHODS ARE AS FOLLOWS:

A. ONE HUNDRED PERCENT (100%) INSPECTION OF CRITICAL CHARACTERISTICS.

B. STATISTICAL PROCESS CONTROL (SPC):

CRITICAL CHARACTERISTICS SHALL MAINTAIN AN AVERAGE C_{pk} INDEX EQUAL TO OR GREATER THAN 1.66 FOR VARIABLES OR A 100% PROCESS AVERAGE RATE OF ACCEPTANCE FOR ATTRIBUTES.

MAJOR CHARACTERISTICS SHALL MAINTAIN AN AVERAGE C_{pk} INDEX EQUAL TO OR GREATER THAN 1.33 FOR VARIABLES OR A 99.994% PROCESS AVERAGE RATE OF ACCEPTANCE FOR ATTRIBUTES.

C. FOR MAJOR CHARACTERISTICS, LOT SAMPLE PER ANSI/ASQC STANDARD Z1.4 OR AN INDUSTRY STANDARD PLAN WITH AN AQL NO GREATER THAN 1.0 MAY BE USED IN LIEU OF SPC. ALTERNATE CONTROL METHODS SHALL BE SUBMITTED TO THE GOVERNMENT PROCURING ACTIVITY FOR APPROVAL.

THE CONTROL METHOD SELECTED FOR ALL REMAINING CHARACTERISTICS SHALL BE AT THE CONTRACTOR'S DISCRETION. REGARDLESS OF THE CONTROL METHOD USED, CONTROL SHALL BE ADEQUATE TO MAINTAIN CONFORMANCE TO DRAWING REQUIREMENTS.

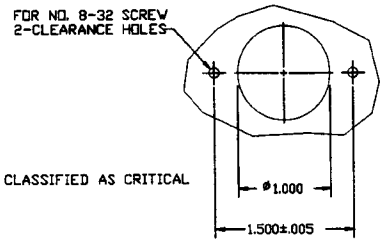

MOUNTING DIMENSIONS

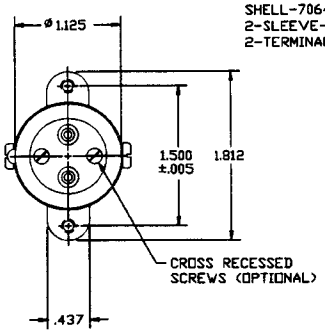

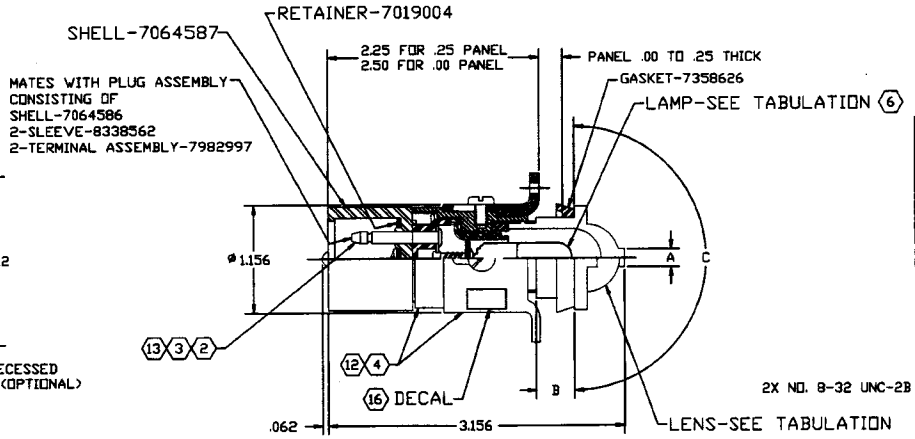

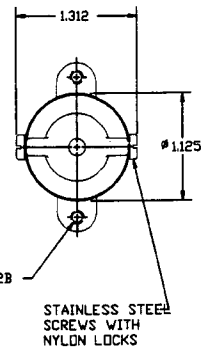

APPROVED SOURCE(S) OF SUPPLY			
PART NO.	VENDOR ADDRESS	CAGE CODE	ITEM IDENTIFICATION
8729063	AURORA CORD AND CABLE COMPANY 325 SOUTH UNION ST AURORA ILLINOIS 60507	5A910	19207SDCN8729063 MFR-5A910
8729064			19207SDCN8729064 MFR-5A910
8729064-1			19207SDCN8729064-1 MFR-5A910
8729064-2			19207SDCN8729064-2 MFR-5A910
10915363			19207SDCN10915363 MFR-5A910
8729063-1			19207SDCN8729063-1 MFR-5A910

PART NO.	APPLICATION	LIGHT AREA	USES LENS PART NO.	LAMP
8729063	LIGHT, WARNING	B, C	7358672-4	12360890-1
8729064	LIGHT, INDICATOR	A, B	7358672-4	12360890-1
8729064-1	LIGHT, INDICATOR	A, B	7358622-1	MS25231-1829 (8)
8729064-2	LIGHT, WARNING	B, C	7358672-4	12360890-3
10915363	LIGHT, WARNING	B, C	7358672-4	12360890-2
8729063-1	LIGHT, CAUTION	B, C	7358672-4	12360890-2

DISTRIBUTION STATEMENT A.
APPROVED FOR PUBLIC RELEASE;
DISTRIBUTION IS UNLIMITED.

SOURCE CONTROL DRAWING — PART NO. SEE TABULATION

PMIC E	UNLESS OTHERWISE SPECIFIED DIMENSIONS ARE IN INCHES TOLERANCES ON 2 PLACE ± 3 PLACE ±	CONTRACT NUMBER / CONTRACTOR	DESIGN ACTIVITY: U.S. ARMY TANK-AUTOMOTIVE AND ARMAMENTS COMMAND WARREN, MICHIGAN 48397-5000
	MATERIAL	DRAWN BY GRJ / DATE (YR-MO-DA) 88-06-13	LIGHT, WARNING
	M109 SER	CHECKED DEJ / ENGINEER MEC/ERN	
	M992 SER	DRAWING APPROVAL	
	M88A1/A2		SIZE E / CAGE CODE 19207 / 8729063
NEXT ASSY / USED ON	DATE ENGR	DESIGN APPROVAL RALPH E MYERS	SCALE 2/1 / UNIT WT. / SHEET
APPLICATION			

F9067J/A