NOTES:

1. APPLICABLE STANDARDS/SPECIFICATIONS:
   A. MIL-STD-100G
   B. ASME Y14.5M-1994

REVISIONS				
ZONE	REV	DESCRIPTION	DATE	APPROVED
—	-	-INITIAL RELEASE- -PRODUCT BASELINE- ERR SSS-U5800	—	—

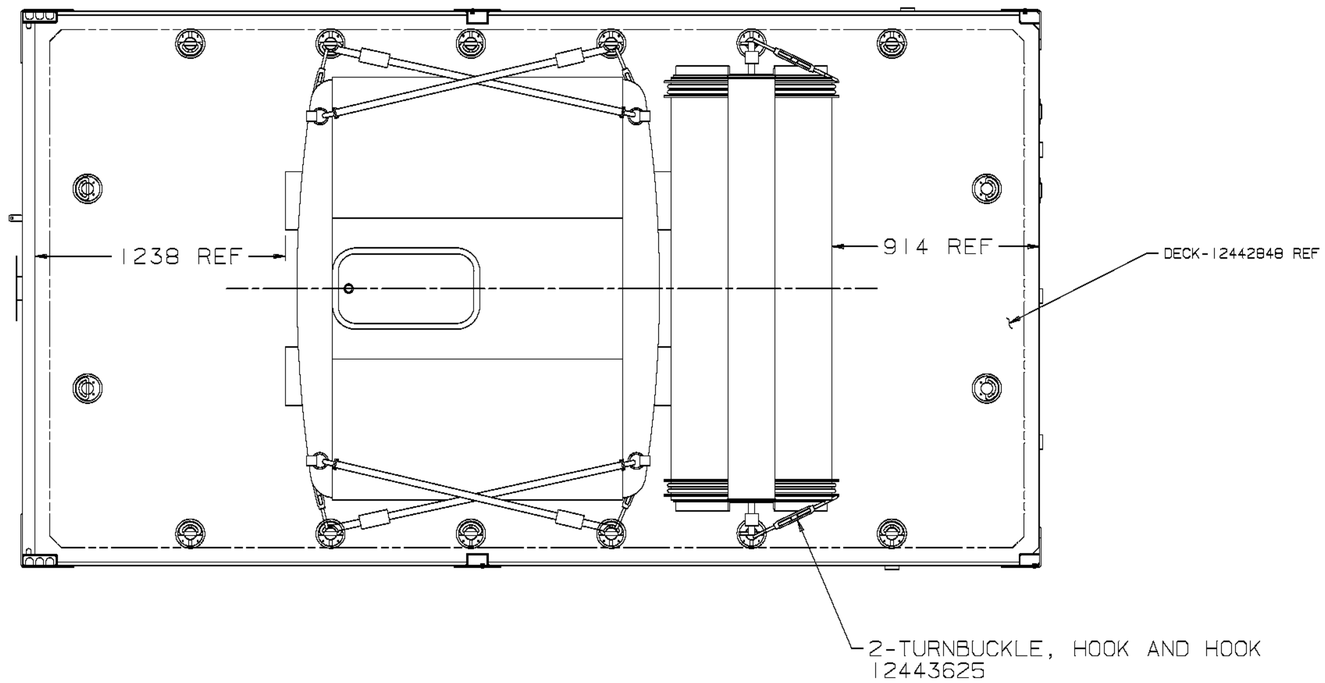

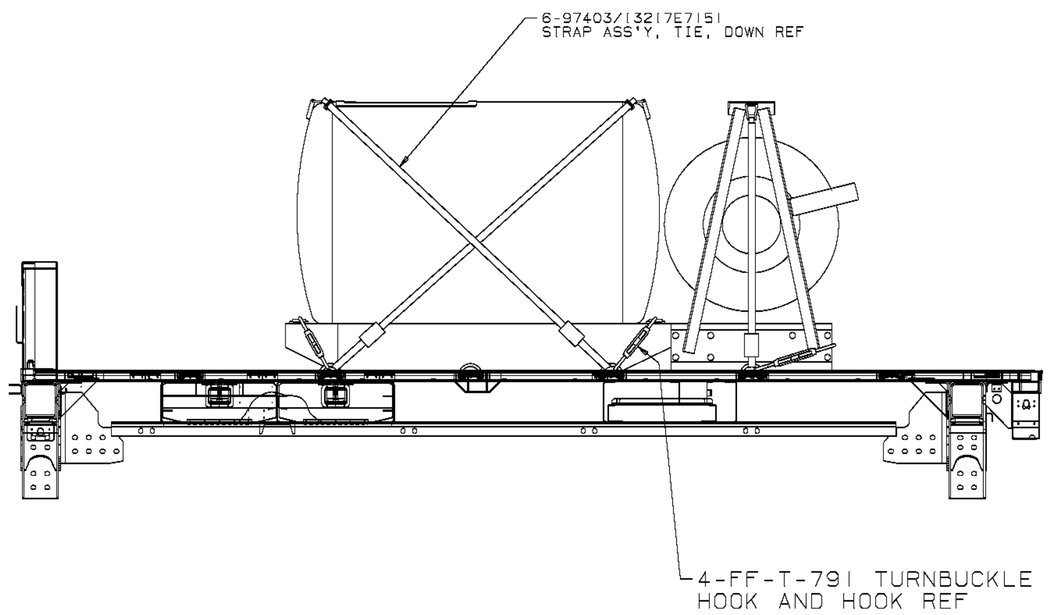

METRIC

DISTRIBUTION STATEMENT A:
APPROVED FOR PUBLIC RELEASE;
DISTRIBUTION IS UNLIMITED.

MECHANICAL PROPERTIES	PMIC A	UNLESS OTHERWISE SPECIFIED DIMENSIONS ARE IN MILLIMETERS TOLERANCES ON 1 PLACE ± 2 PLACE ±	CONTRACT NUMBER DAAE07-99-C-S030
YP			CONTRACTOR STEWART & STEVENSON SERVICES SEALY TEXAS U.S.A.
TS			
ELE			
RA		THIRD ANGLE PROJECTION	DRAWN BY R. JOHNSON / DATE (YR-MO-DA) 02-01-22
BK			CHECKER R. SELBY / ENGINEER J. FISH
RK			
	57K2019 / MTVT	QA P. FIESTER	DRAWING APPROVAL - GOV'T D. ALDEA
	NEXT ASSY / USED ON	MAT'L ENGR M. CHURCH	DESIGN APPROVAL - GOV'T D. ALDEA
	APPLICATION		

DESIGN ACTIVITY
U.S. ARMY, TANK AUTOMOTIVE COMMAND
WARREN, MICHIGAN 48397-5000

RESTRAINT INSTALLATION, TANK & PUMP UNIT, SINGLE TANK

SIZE	CAGE CODE	DWG NO
E	19207	12443624

SCALE 1/10 | UNIT WT — | SHEET —

FILE NAME 36524-ES | TACOM-E-METRIC

RMS:05-15-16:7:12