ZONE	LTR	DESCRIPTION	DATE (YR-MO-DA)	APPROVED
		ALL REVISIONS LISTED ON SH 1		
—		PRODUCT BASELINE ECP/ERR TAC-U3830	00-08-03	—
	A	27 THIS SHEET ADDED	00-12-14	RB MRZ

REF COPY -4

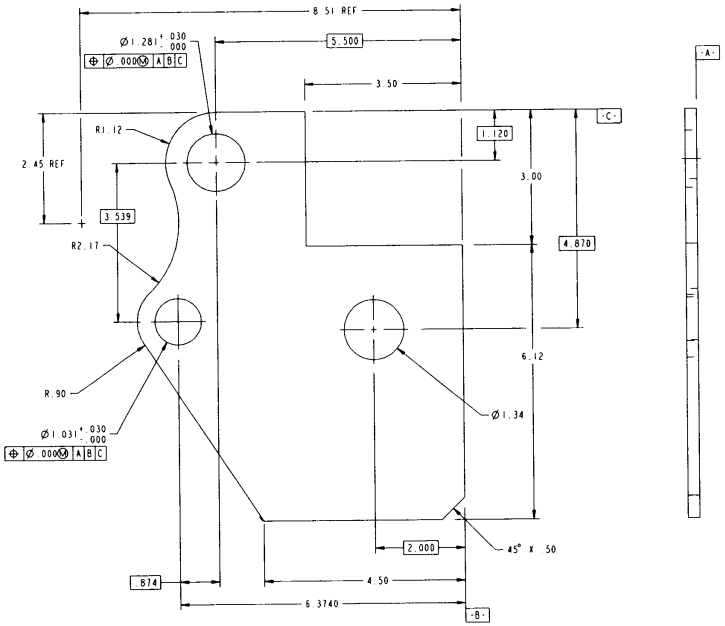

12475605-002 REF

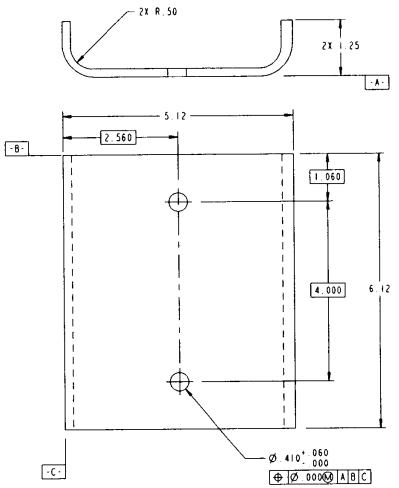

12475605-003 REF

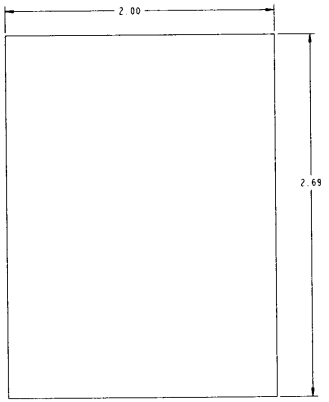

12475604-006 REF
SCALE: 3/1

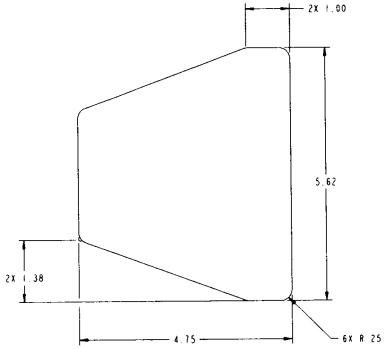

12475605-004 REF

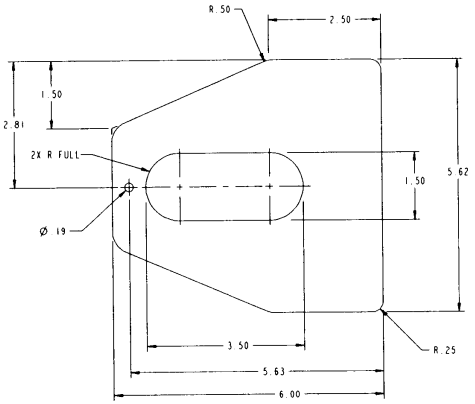

12475605-005 REF

PMIC		UNLESS OTHERWISE SPECIFIED DIMENSIONS ARE IN INCHES TOLERANCES ON 2 PLACE 3 PLACE ± .03 ±	CONTRACT NUMBER	PART NO
			CONTRACTOR	U.S. ARMY TANK-AUTOMOTIVE AND ARMAMENTS COMMAND WARREN, MICHIGAN 48397-5000
			DRAWN BY DL / DATE (YR-MO-DA) 00-02-04	BUMPERETTE WELDMENT
			CHECKER PWP / ENGINEER DL	
57K3398	FMTV/A1	MATL ENGR	DRAWING APPROVAL R. BILOTTA	SIZE E / CAGE CODE 19207 / DWG NO 12475605
NEXT ASSY	USED ON		DESIGN APPROVAL ALLAN TAYLOR	SCALE 1/1 / UNIT WT / SHEET 2 OF 2
APPLICATION				

12475605 SHT