NOTES:

1. APPLICABLE STANDARDS / SPECIFICATIONS:
   A. DOD-STD-001000 (AR)
   B. ANSI-Y14.5M-1982
2. MATERIAL: STEEL, ASTM A36, PLATE, HOT ROLLED, .25 THK
3. WELD IAW MIL-STD-1261, CLASS 2
4. FINISH: FINAL PROTECTIVE FINISH IAW 12420325 METHOD 1.
5. DIMENSIONAL LIMITS APPLY BEFORE PAINTING
6. ITEM IDENTIFICATION: APPLY THE FOLLOWING MARKINGS IAW MIL-STD-130, METHOD OPTIONAL.
   19207-12475604
   MFR- 1. ——— MFR CAGE CODE

ZONE	LTR	DESCRIPTION	DATE		APPROVED
—	-	PRODUCT BASELINE ECP/ERR TAC-03830	—		—
	A	1) REDRAWN WITH CHANGE 2) SEE SHEET 2	89-12-14	RB	MR2

REF-
Copy
-3

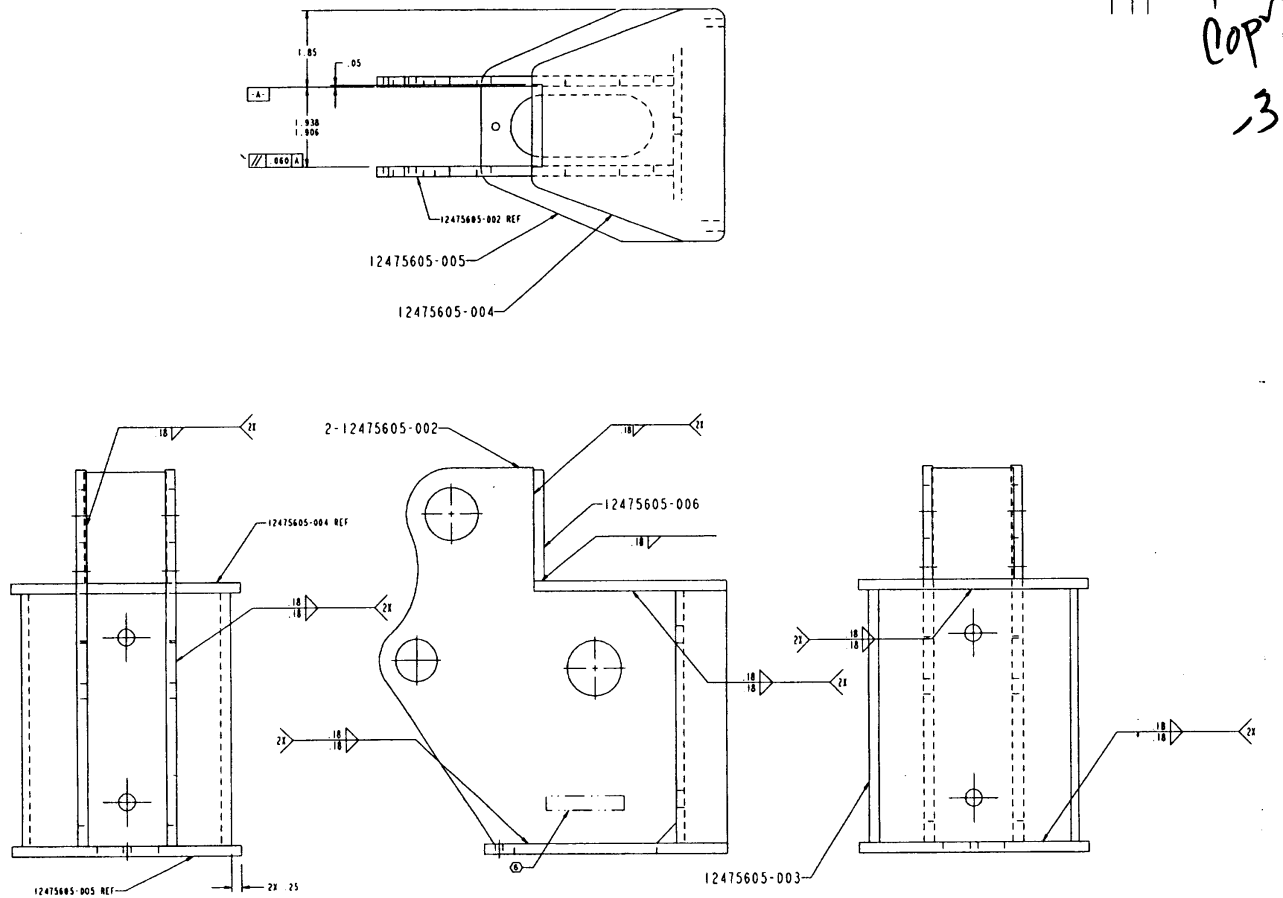

			A	A
			SHEET 2	SHEET 1
REVISION STATUS OF SHEETS				

PART NO.

PMIC	UNLESS OTHERWISE SPECIFIED: DIMENSIONS ARE IN INCHES. TOLERANCES ON 2 PLACE ± .03 3 PLACE ± ———	CONTRACT NUMBER ——— CONTRACTOR	U.S. ARMY TANK-AUTOMOTIVE AND ARMAMENTS COMMAND WARREN, MICHIGAN 48397-5000
		DRAWN BY DL / DATE (M-M-D) 00-02-04	BUMPERETTE WELDMENT
		CHECKED PWP / ENGINEER DL	
57K3398 / FMTV/A1		DRAWING APPROVAL R. BILOTTA	SIZE E / CAGE CODE 19207 / DWG NO 12475605
NEXT ASSY / USED ON	MATL ENGR	DESIGN APPROVAL ALLAN TAYLOR	SCALE 1/1 / UNIT WT / SHEET 1 OF 2
APPLICATION			

12475605