NOTES:

1. APPLICABLE STANDARDS/SPECIFICATIONS:
   A. DOD-STD-00100D(AR).
   B. ANSI Y14.5M-1982

2. MATERIAL: GALVANIZED PIPE, IAW ASTM A53 TYPE F 3/4 INCH, SCHEDULE 40.

3. ASTM E380 APPLIES. METHOD B SHALL BE USED IN CONVERTING AND ROUNDING OFF. 1 INCH = 25.4 MILLIMETERS APPLIES.

4. FINISH: FINAL PROTECTIVE FINISH IAW 12420325 METHOD 7. PAINT SHALL BE LUSTERLESS BLACK.

5. REMOVE ALL BURRS, BREAK SHARP EDGES.

(6) ITEM IDENTIFICATION: AFTER FINAL FINISH RUBBER STAMP OR STENCIL THE FOLLOWING MARKING IAW MIL-STD-130 IN CONTRASTING COLOR IAW A-A-208.
19207-12420275
MFR-[ ] ← MANUFACTURER'S CAGE CODE

(7) NEXT ASSY: 57K1898, 57K1899, 57K1900, 57K1901, 57K1922, 57K1923, 57K1924, 57K1925, 57K1926.

(8) USED ON: M1078, M1081, M1082, M1083, M1085, M1090, M1093, M1094, M1095, M1078A1, M1081A1, M1083A1, M1085A1, M1090A1, M1093A1, M1094A1.

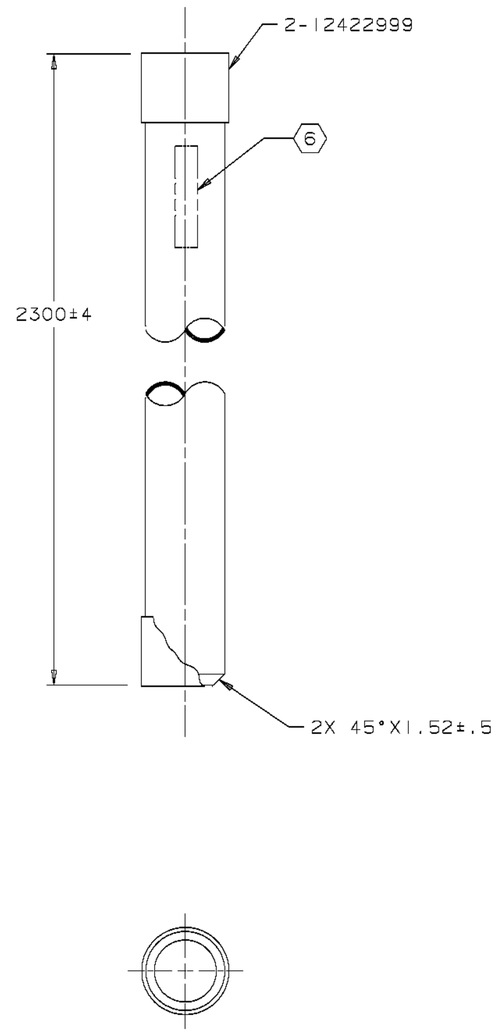

REVISIONS

ZONE	REV	DESCRIPTION	DATE	APPROVED
—	XA	REVISED IAW NOR-3876-2	93/12/26	R.NAWROCKI F.H. D.C.
—	XB	REVISED IAW NOR-4988-1	96/07/31	K.PHILLIPS V.T. DAW
—	XC	REVISED IAW ECR 5508	97/03/18	V.TRAN J.Y. D.G.
—	-	-PRODUCT BASELINE- ERR SSS-R6143	97/03/18	V.TRAN J.Y. D.G.
D8 C8 C8 A4	A	1)REVISED NOTE 4 2)REVISED NOTE 6 3)ADDED NOTES 7 AND 8 4)REVISED APPLICATION BLOCK ERR SSS-R6253	98-06-05	Q.BHUIYA LDL KEB
B2	B	1)DELETED DIM 2 X R 1.5 ± 0.7 ERR SSS-R6475	98-07-30	Q.BHUIYA ADJ DAW
D5 C6 B5 D5 B5 D8 A1	C	1)ADDED CALLOUT 2-12422999 2)DIM 2300±4 WAS 2310±4 3)ADDED CALLOUT 45°X1.52 4)REVISED GEOM 5)REVISED NOTES 2 AND 4 6)REVISED TITLE FROM PIPE TO PIPE ASSY ERR SSS-U5898	03-01-22	D.GRANTHAM ADJ SEH

METRIC

PART NO. 12420275

MECHANICAL PROPERTIES: YP, TS, EL2, RA, BH, RH	PMIC A	UNLESS OTHERWISE SPECIFIED DIMENSIONS ARE IN MILLIMETERS. TOLERANCES ON 1 PLACE ± —— 2 PLACE ± ——	CONTRACT NUMBER DAAE07-92-C-R001
			CONTRACTOR STEWART & STEVENSON SERVICES SEALY TEXAS U.S.A.
		THIRD ANGLE PROJECTION	DRAWN BY F.HAYES; DATE (YR-MO-DA) 93-07-10
			CHECKER D.CORNWELL; ENGINEER R.NAWROCKI
	(7) NEXT ASSY; (8) USED ON	QA Y.STEPHENSON	DRAWING APPROVAL - GOV'T M.GRACE
	APPLICATION	MAT'L ENGR T.BRUSTER	DESIGN APPROVAL - GOV'T M.GRACE

DESIGN ACTIVITY: U.S. ARMY, TANK AUTOMOTIVE COMMAND, WARREN, MICHIGAN 48397-5000

PIPE, ASSEMBLY

SIZE	CAGE CODE	DWG NO
D	19207	12420275

SCALE NONE | UNIT WT —— | SHEET ——

DISTRIBUTION STATEMENT A:
APPROVED FOR PUBLIC RELEASE;
DISTRIBUTION IS UNLIMITED.

FILE NAME 0275CDS | TACOM-D-METRIC

SEW10(-22-10:11:2(