REVISIONS				
ZONE	REV	DESCRIPTION	DATE	APPROVED
		ALL REVISIONS LISTED ON SHEET 1		
	XF	REDRAWN IAW NOR 4673-2	94-5-23	M.FISCHER JH MR
—	XG	REVISED IAW THE FOLLOWING NOR(S): 4383-9	96-05-16	M.ROSS LDL DG
—	XH	REVISED IAW ECR 5446	97-02-15	M.ROSS LDL KEB
—	-	-PRODUCT BASELINE- ERR SSS-R6163	97-02-15	M.ROSS LDL KEB
G6 G5 G3 H5 H2 E3 D6 D4 D5	B	4) ADDED HINGE 5) ADDED HINGE 6) ADDED HINGE 7) 12417336-001 WAS 12417336 8) 12417337-001 WAS 12417337 9) 12418937-001 WAS 12418937 10) MOVED RUBBER STOP 11) MOVED RUBBER STOP 12) ADDED HINGE ERR SSS-R6875	01-02-27	J.NICHOLSON AWT J.N.
A5	C	3) REVISED DISTRIBUTION STATEMENT C ERR SSS-U5880	02-10-08	J.NICHOLSON MG SEW

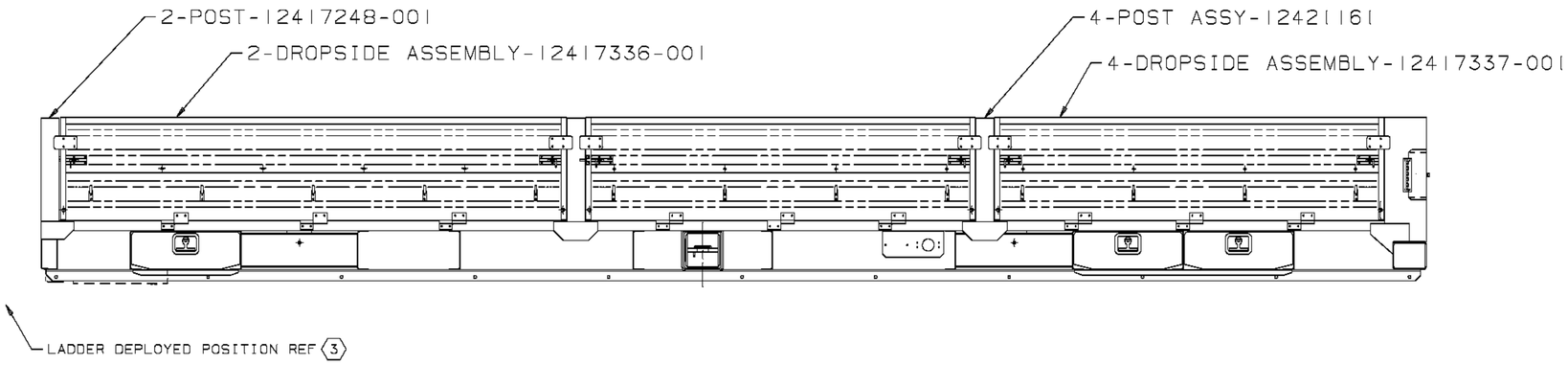

RIGHT SIDE VIEW

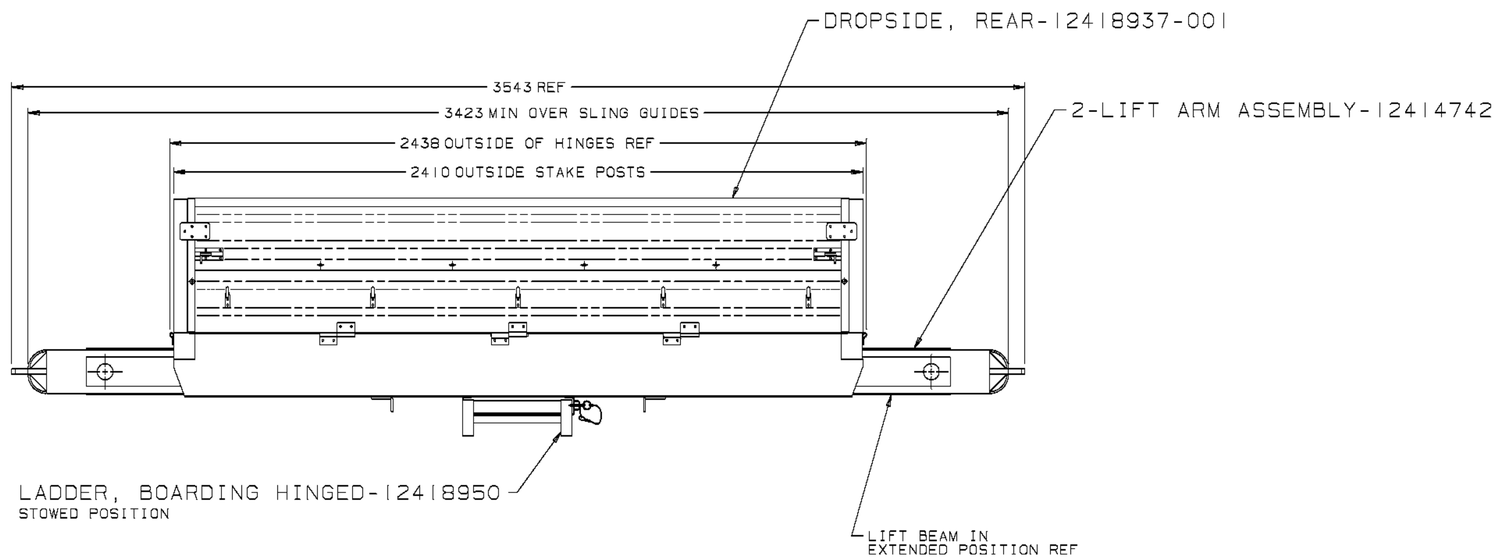

REAR VIEW
SCALE 1/8

METRIC

PART NO. 12378479

DISTRIBUTION STATEMENT C:
DISTRIBUTION AUTHORIZED TO U.S. GOVERNMENT AGENCIES AND THEIR CONTRACTORS.
REASON: ADMINISTRATIVE OR OPERATIONAL USE.
DATE OF DETERMINATION: 02-10-08
OTHER REQUESTS FOR THIS DOCUMENT SHALL BE REFERRED TO THE U.S. ARMY TANK AUTOMOTIVE AND ARMAMENTS COMMAND, ATTN: SFAE-CSS-MT. WARREN, MICHIGAN 48397-5000.

DESTRUCTION NOTICE: FOR UNCLASSIFIED, LIMITED DOCUMENTS, DESTROY BY ANY METHOD THAT WILL PREVENT DISCLOSURE OF CONTENTS OR RECONSTRUCTION OF THE DOCUMENT.

MECHANICAL PROPERTIES	PHIC A	UNLESS OTHERWISE SPECIFIED DIMENSIONS ARE IN MILLIMETERS TOLERANCES ON 1 PLACE ±4 2 PLACE ±	CONTRACT NUMBER DAAE07-92-C-R001	DESIGN ACTIVITY U.S. ARMY, TANK AUTOMOTIVE COMMAND WARREN, MICHIGAN 48397-5000
YP TS ELE RA BH RH	NEXT ASSY / USED ON APPLICATION	THIRD ANGLE PROJECTION	CONTRACTOR STEWART & STEVENSON SERVICES SEALY TEXAS U.S.A.	BODY ASSEMBLY, CARGO, MTV LWB
		QA Y.STEPHENSON	DRAWN BY D. McBREARTY DATE (YR-MO-DA) 92-01-10	SIZE E CAGE CODE 19207 DWG NO 12378479
		MAT'L ENGR T.STORY	CHECKER R.GLOWACKE ENGINEER M. FISCHER	SCALE 1/10 UNIT WT 361.08 Kg SHEET 2
			DRAWING APPROVAL - GOV'T M.GRACE	FILE NAME B479CEM TACOM-E-METRIC
			DESIGN APPROVAL - GOV'T M.GRACE	

MS:10-08-10:11:04