DRAWING SIZE D

REVISIONS					
ZONE	MODEL REV	DRAWING REV	DESCRIPTION	DATE(YEAR-MO-DA)	APPROVED
—	-	-	INITIAL RELEASE -PRODUCT BASELINE- ERR 3SS-U5898	-	-

NOTES:

1. APPLICABLE STANDARDS/SPECIFICATIONS:
   A. MIL-STD-100G
   B. ASME Y14.5M-1994
2. MATERIAL: VINYL
3. ASTM E380 APPLIES. METHOD B SHALL BE USED IN CONVERTING AND ROUNDING OFF. 1 INCH = 25.4mm APPLIES.
4. IDENTIFICATION OF THE SUGGESTED SOURCE(S) OF SUPPLY HEREON IS NOT TO BE CONSTRUED AS A GUARANTEE OF PRESENT OR CONTINUED AVAILABILITY AS A SOURCE OF SUPPLY FOR THE ITEM(S).

SUGGESTED SOURCE(S) OF SUPPLY				
PART NO.	VENDOR		VENDOR PART NO.	ITEM IDENTIFICATION
	ADDRESS	CAGE CODE		
12422999	CAPLUGS WEST 18704 SOUTH FERRIS PLACE DOMINGUEZ, CA	99017	VC1000-16	MFR-99017-VC1000-16

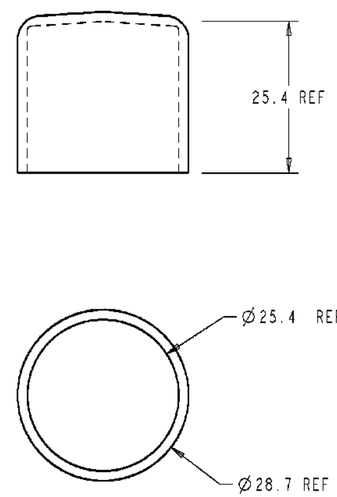

THIS DRAWING WAS GENERATED FROM A SOLID MODEL AND IS CAD MAINTAINED. CHANGES SHALL BE INCORPORATED BY THE DESIGN ACTIVITY.

PART NO. 12422999

VENDOR ITEM DRAWING

DISTRIBUTION STATEMENT A.
APPROVED FOR PUBLIC RELEASE;
DISTRIBUTION IS UNLIMITED.

PMIC	
MECHANICAL PROPERTIES	
YP	
TS	
EL2	
RA	
BH	12420275
RH	
NEXT ASSY	USED ON
APPLICATION	

METRIC
DO NOT SCALE DRAWING
UNLESS OTHERWISE SPECIFIED DIMENSIONS ARE IN MILLIMETERS
TOLERANCES ON ANGLES ± °
0 PLACE DECIMALS ±
1 PLACE DECIMALS ±
THIRD ANGLE PROJECTION

MATL ENGR	M.CHURCH
MODELED BY	A. JOINER

CONTRACT NUMBER	DAAE07-99-C-S030
CONTRACTOR	STEWART & STEVENSON SERVICES SEALY, TEXAS U.S.A.
DRAWN BY	A. JOINER
DATE(YEAR-MO-DA)	03-01-03
CHECKER	S.HALL
ENGINEER	D.GRANTHAM
ENGINEER	
QUALTIY ENGINEER	P.FIESTER
DRAWING APPROVAL	E.KHALIL 02-11-13
DESIGN APPROVAL	E.KHALIL 02-11-13

DESIGN ACTIVITY
U.S. ARMY, TANK AUTOMOTIVE COMMAND
WARREN MICHIGAN 48397-5000

CAP, VINYL

SIZE	CAGE CODE	
D	19207	12422999
SCALE 2/1	UNIT WT. 0.000	SHEET 1 OF 1

FORMAT: D_FNTV_MET_1_0

NSN NSN