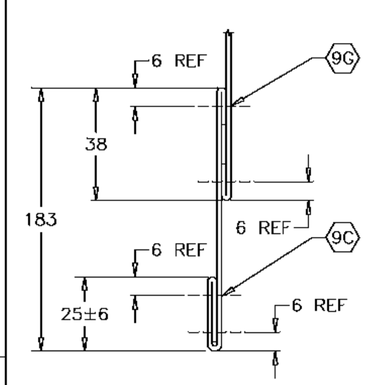

SECTION A–A SH 2, A6 (15)
SCALE: NONE

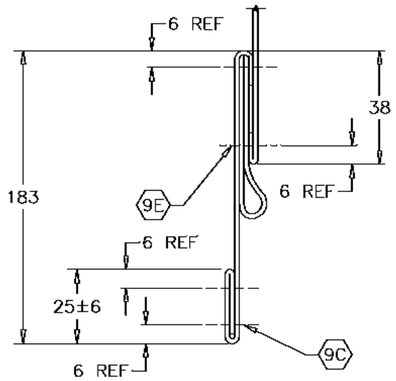

SECTION B–B SH 2, A6 (15)
SCALE: NONE

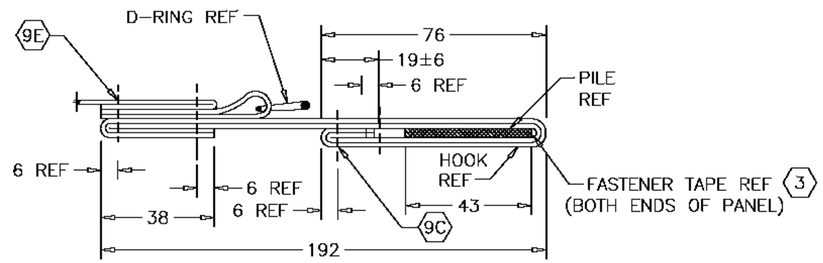

VIEW C–C SH 5, D5
SCALE: NONE

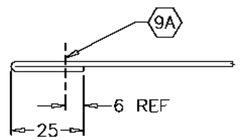

SECTION D–D SH 2, B5 (15)
SCALE: NONE

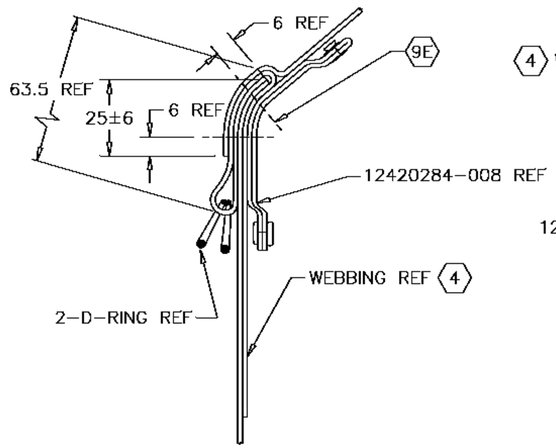

SECTION F–F SH 3, B6 (15)
SCALE: NONE

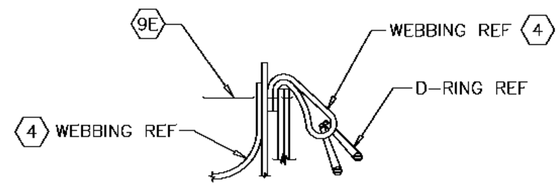

SECTION M–M SH 5, D5 (15)
SCALE: NONE

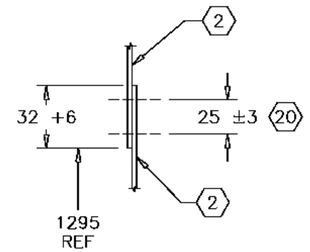

SECTION T–T SH 6, D7
SCALE: NONE

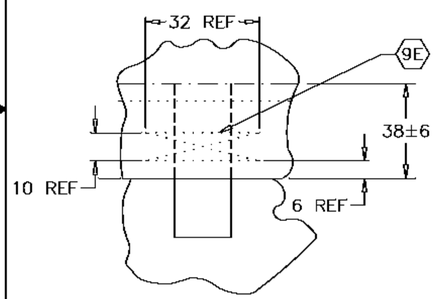

VIEW E SH 2, A4 (15)
SCALE: NONE

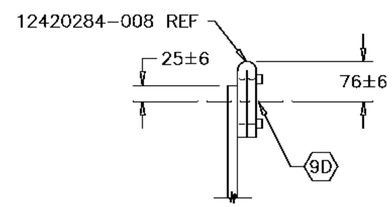

SECTION N–N SH 5, B1 (15)
SCALE: NONE

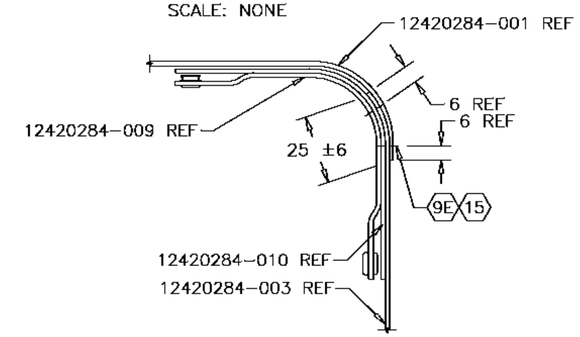

SECTION P–P SH 3, C4
SCALE: NONE
ROTATED 180°

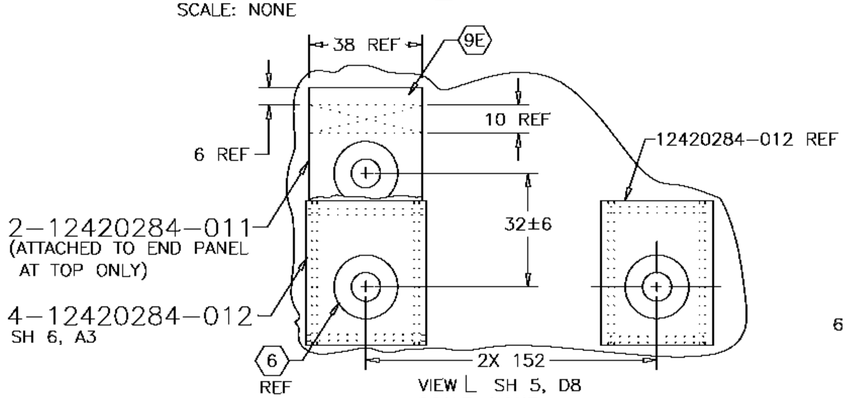

VIEW L SH 5, D8
SCALE: NONE

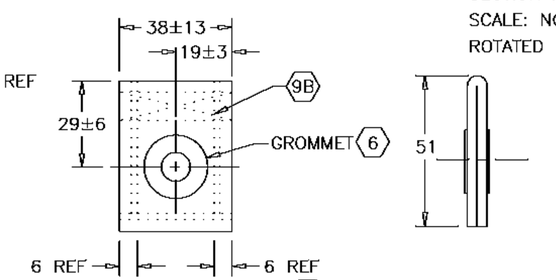

SCALE: NONE
SH 5, D6

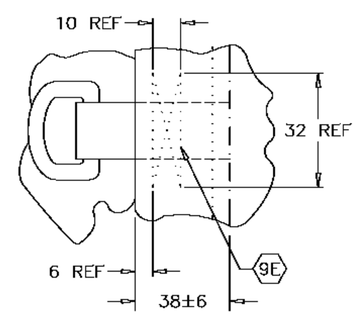

VIEW S SH 2, C8 (15)
SCALE: NONE

METRIC

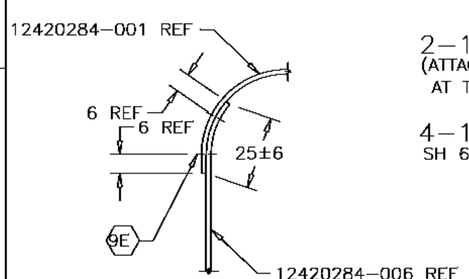

SECTION K–K SH 3, B5 (15)
SCALE: NONE

REVISIONS

ZONE	REV	DESCRIPTION	DATE	APPROVED
—	—	ALL REVISIONS LISTED ON SH 1	——	——
—	XB	REVISED IAW ECR 5508		V. TRAN
		THIS SHEET ADDED	97/03/04	J.Y. RGT
—	—	–PRODUCT BASELINE–		V. TRAN
		ERR SSS–R6143	97/03/04	J.Y. RGT
D8	A	101) DIM 183 WAS 216		
D7		102) DIM 183 WAS 216		
D4		103) DIM 192 WAS 216		
D4		104) DIM 19±6 WAS 25±6		
C3		105) ADDED SECTION T–T		
B5		106) DIM 38±13 WAS 25±6		
B5		107) DIM 19±3 WAS 13±6		Q.BHUIYA
		ERR SSS–R6257	98–12–31	ADJ KEB
B3	B	6) REVISED VIEW P–P		Q.BHUIYA
		ERR SSS U2395R1	99–08–11	ADJ KEB
A6	C	80)REVISED VIEW L		
A6		81)ADDED (ATTACHED TO END PANEL AT TOP ONLY) CALLOUT		
A6		82)ADDED SH 6, A3 CALLOUT		
D4		83)REVISED SECTION VIEW C–C & SH5, D5 WAS SH2, C3		
A5		84)DISTRIBUTION STATEMENT C WAS A		D.GRANTHAM
		ERR SSS–U5898	03–02–11	ADJ SEH

DISTRIBUTION STATEMENT C:
DISTRIBUTION AUTHORIZED TO U.S. GOVERNMENT AGENCIES AND THEIR CONTRACTORS.
REASON: ADMINISTRATIVE OR OPERATIONAL USE.
DATE OF DETERMINATION: 02–12–11
OTHER REQUESTS FOR THIS DOCUMENT SHALL BE REFERRED TO THE U.S. ARMY TANK AUTOMOTIVE AND ARMAMENTS COMMAND, ATTN: SFAE–CSS–MT. WARREN, MICHIGAN 48397–5000.

DESTRUCTION NOTICE: FOR UNCLASSIFIED, LIMITED DOCUMENTS, DESTROY BY ANY METHOD THAT WILL PREVENT DISCLOSURE OF CONTENTS OR RECONSTRUCTION OF THE DOCUMENT.

MECHANICAL PROPERTIES: YP, TS, EL2, RA, BH, RH

PMIC A

NEXT ASSY | USED ON
APPLICATION

UNLESS OTHERWISE SPECIFIED DIMENSIONS ARE IN MILLIMETERS
TOLERANCES ON 1 PLACE ± —— 2 PLACE ± ——
THIRD ANGLE PROJECTION

QA Y.STEPHENSON
MAT'L ENGR T. STORY

CONTRACT NUMBER DAAE07–92–C–R001
CONTRACTOR STEWART & STEVENSON SERVICES SEALY TEXAS U.S.A.
DRAWN BY D.L.ROBERTS DATE (YR–MO–DA) 93–01–30
CHECKER D.CORNWELL ENGINEER R.NAWROCKI
DRAWING APPROVAL – GOV'T M.GRACE
DESIGN APPROVAL – GOV'T M.GRACE

PART NO. (SEE TABLE)
DESIGN ACTIVITY U.S. ARMY, TANK AUTOMOTIVE COMMAND WARREN, MICHIGAN 48397–5000

COVER, ASSEMBLY, FITTED, MTV/LWB

SIZE D | CAGE CODE 19207 | DWG NO 12420284
SCALE 1/25 | UNIT WT —— | SHEET 7

FILE NAME: 0284CD7.DWG
TACOM–D–METRIC