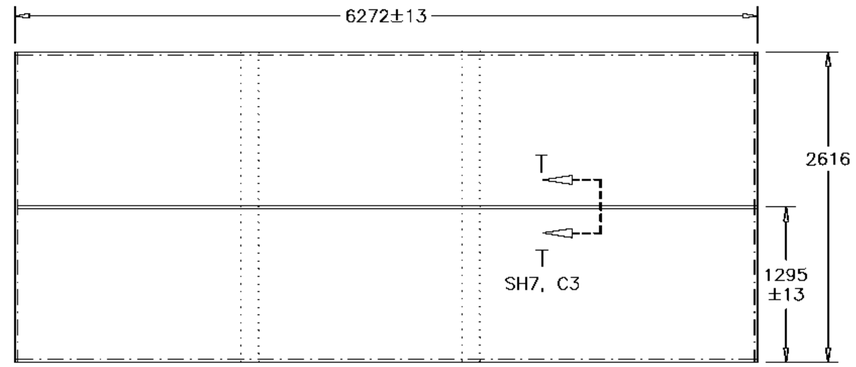

TOP OUTSIDE PANEL

12420284–001 REF (2)

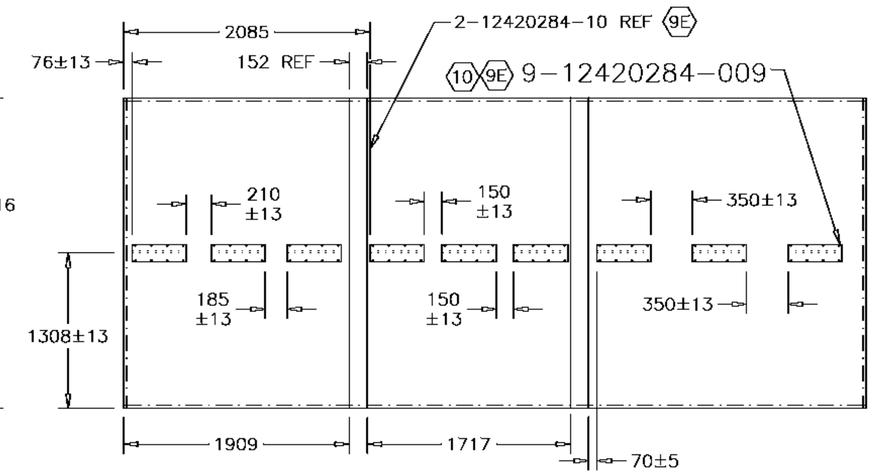

TOP INSIDE PANEL

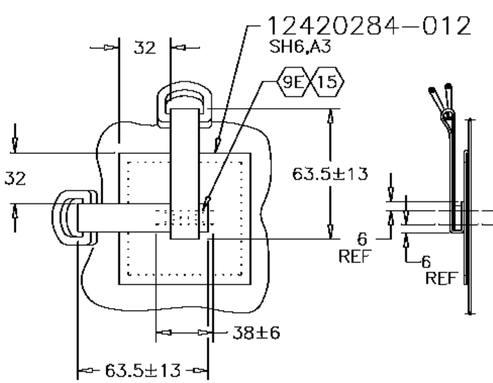

VIEW J SH 3, C7
SCALE: NONE

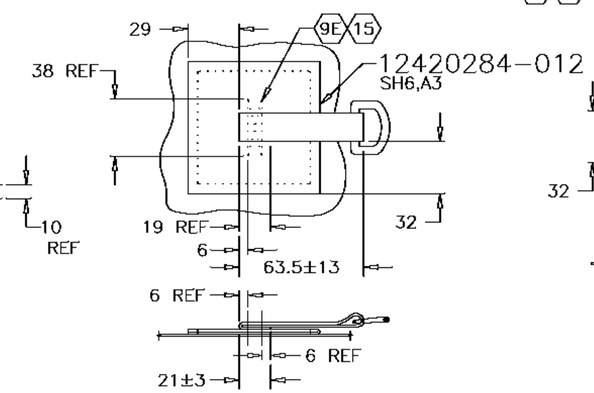

VIEW G SH 3, A6
SCALE: NONE

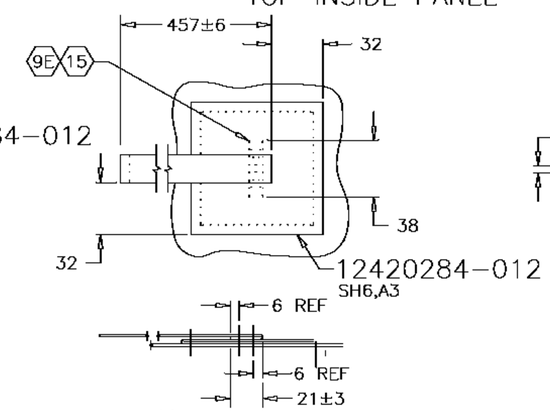

VIEW H SH 3, A6
SCALE: NONE

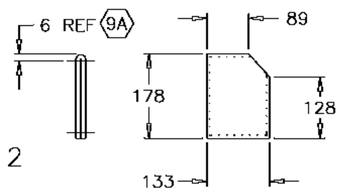

12420284–014 REF (2)
SH 5, C6
SH 5, D8
SCALE: NONE

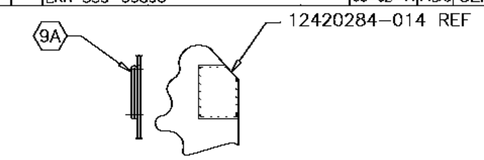

VIEW R SH 5, C7 (15)
SCALE: NONE

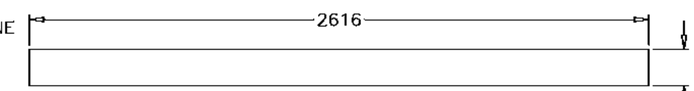

12420284–010 REF (2)
SH 3, C6
SCALE: NONE

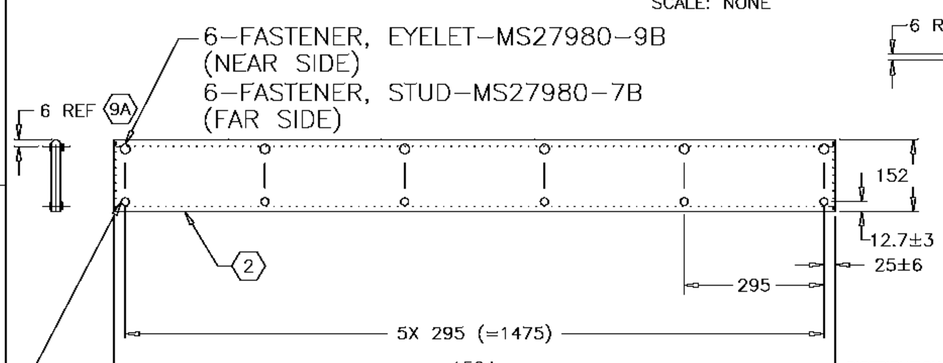

12420284–008 REF
SH 3, D3
SCALE: NONE

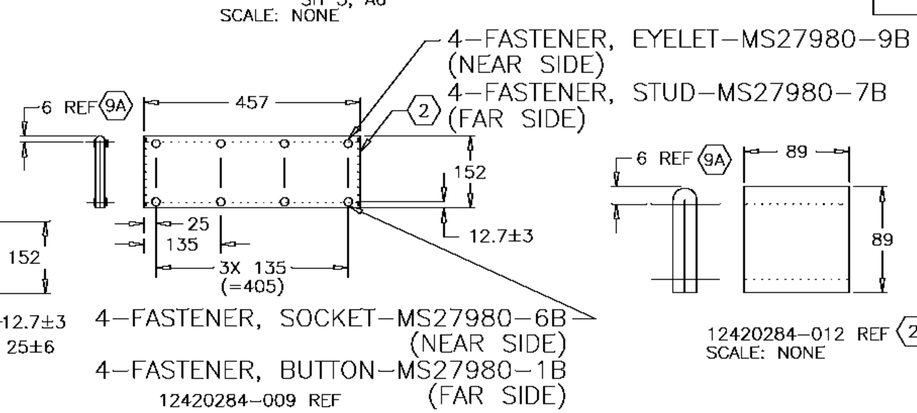

12420284–009 REF
SCALE: NONE

12420284–012 REF (2)
SCALE: NONE

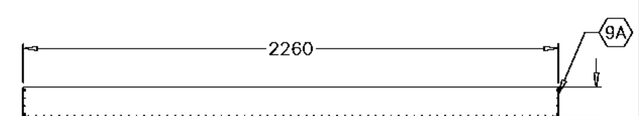

12420284–013 REF (2)
SH 5, D6
SCALE: NONE

METRIC

PART NO. (SEE TABLE)

REVISIONS

ZONE	REV	DESCRIPTION	DATE	APPROVED
—	–	ALL REVISIONS LISTED ON SH 1	—	—
—	XB	REVISED IAW ECR 5508		V. TRAN
		THIS SHEET ADDED	97/03/04	J.Y. RGT
—	–	–PRODUCT BASELINE–		V. TRAN
		ERR SSS–R6143	97/03/04	J.Y. RGT
D7	A	79) DIM 6272±13 WAS 6267±13		
D7		80) ADDED SECTION T–T CALLOUT		
D6		81) ADDED DIM 1295±13		
D5		82) DIM 76±13 WAS 238		
D5		83) DIM 2085 WAS 2171		
C5		84) DIM 1909 WAS 1908		
C4		85) DIM 1717 WAS 1715		
C4		86) ADDED DIM 70±5		
C3		87) DELETED 3–12420284–008 REF CALLOUT		
C3		88) DELETED DIM 454		
D4		89) REVISED TOP INSIDE PANEL GEOMETRY		
D5		90) ADDED DIM 210±13		
D5		91) ADDED DIM 185±13		
D4		92) ADDED DIM 150±13 (2 PL)		
D3		93) ADDED DIM 350±13 (2 PL)		
D4		94) ADDED 9–12420284–009 REF CALLOUT		
D3		95) 9X (9E) WAS (9E) 3X		
C7		96) DIM 63.5±13 WAS 63.5±6		
B8		97) DIM 63.5±13 WAS 63.5±6		
B6		98) DIM 63.5±13 WAS 63.5±6		
B5		99) DIM 152 WAS 133±6		
B4		100) DIM 152 WAS 152±6		Q.BHUIYA
		ERR SSS–R6257	98–12–31	ADJ KEB
D3	B	5) DELETED REF CALLOUT 9–12420284–009		Q.BHUIYA
		ERR SSS U2395R1	99–08–11	ADJ KEB
C7	C	75)12420284–012, SH6,A3 WAS 12420284–012 REF (3 PLCS)		
A5		76)DELETED SH3, C4		
A3		77)DELETED SH3, D4		
D3		78)CALLOUT 9–12420284–009 WAS 9X		
A5		79)DISTRIBUTION STATEMENT C WAS A		D.GRANTHAM
		ERR SSS–U5898	03–02–11	ADJ SEH

DISTRIBUTION STATEMENT C:
DISTRIBUTION AUTHORIZED TO U.S. GOVERNMENT AGENCIES AND THEIR CONTRACTORS.
REASON: ADMINISTRATIVE OR OPERATIONAL USE.
DATE OF DETERMINATION: 02–12–11
OTHER REQUESTS FOR THIS DOCUMENT SHALL BE REFERRED TO THE U.S. ARMY TANK AUTOMOTIVE AND ARMAMENTS COMMAND, ATTN: SFAE–CSS–MT. WARREN, MICHIGAN 48397–5000.

DESTRUCTION NOTICE: FOR UNCLASSIFIED, LIMITED DOCUMENTS, DESTROY BY ANY METHOD THAT WILL PREVENT DISCLOSURE OF CONTENTS OR RECONSTRUCTION OF THE DOCUMENT.

MECHANICAL PROPERTIES	
YP	
TS	
EL2	
RA	
BH	
RH	

PMIC A

NEXT ASSY	USED ON
APPLICATION	

UNLESS OTHERWISE SPECIFIED DIMENSIONS ARE IN MILLIMETERS
TOLERANCES ON
1 PLACE ± —— 2 PLACE ± ——
THIRD ANGLE PROJECTION

QA Y.STEPHENSON
MAT'L ENGR T.STORY

CONTRACT NUMBER DAAE07–92–C–R001
CONTRACTOR STEWART & STEVENSON SERVICES SEALY TEXAS U.S.A.

DRAWN BY	DATE (YR–MO–DA)
D.L.ROBERTS	93–01–30
CHECKER D.CORNWELL	ENGINEER R.NAWROCKI

DRAWING APPROVAL – GOV'T M.GRACE
DESIGN APPROVAL – GOV'T M.GRACE

DESIGN ACTIVITY
U.S. ARMY, TANK AUTOMOTIVE COMMAND
WARREN, MICHIGAN 48397–5000

COVER, ASSEMBLY, FITTED, MTV/LWB

SIZE	CAGE CODE	DWG NO
D	19207	12420284

SCALE 1/25 UNIT WT —— SHEET 6

FILE NAME: 0284CD6.DWG TACOM–D–METRIC