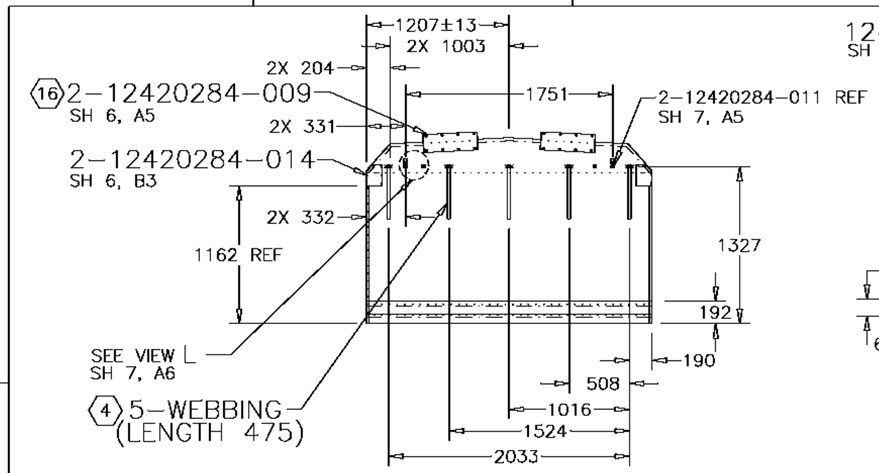


REAR INSIDE PANEL

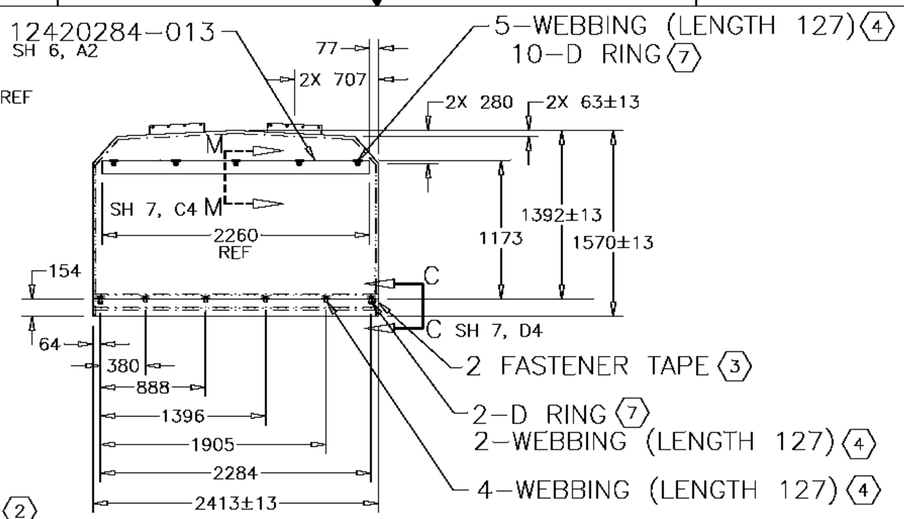


REAR OUTSIDE PANEL

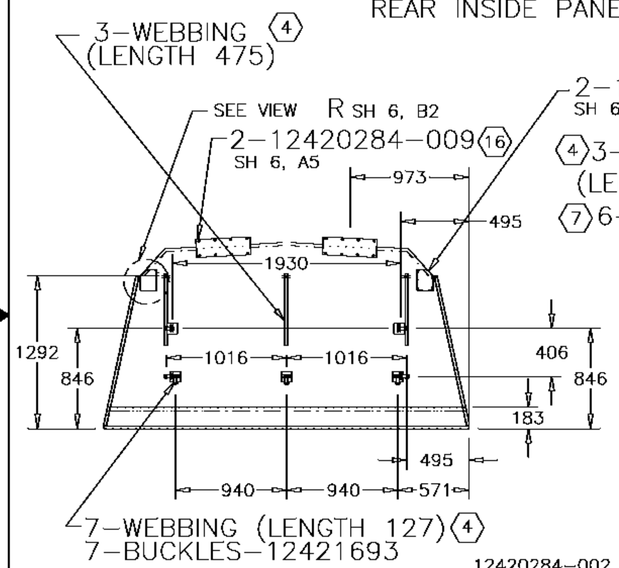


FRONT INSIDE PANEL

12420284-003 REF (2)
SH 2, C3

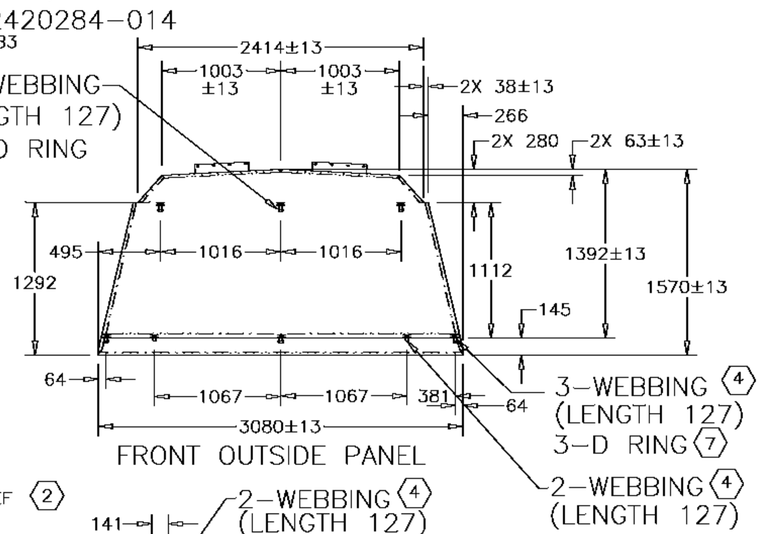


FRONT OUTSIDE PANEL

12420284-002 REF (2)
SH 2, C8

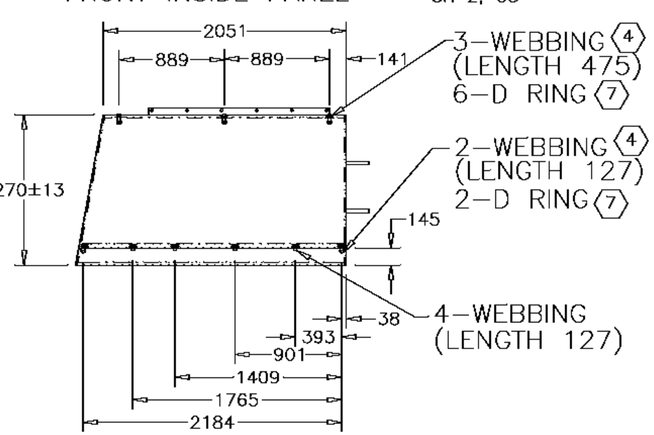


RIGHT MIDDLE OUTSIDE PANEL

12420284-007 REF
SH 2, D5

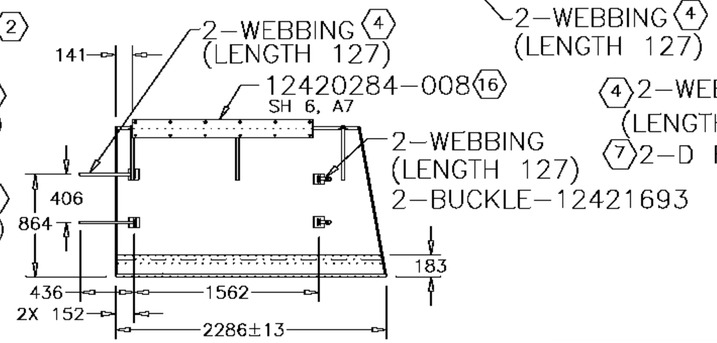


RIGHT MIDDLE INSIDE PANEL

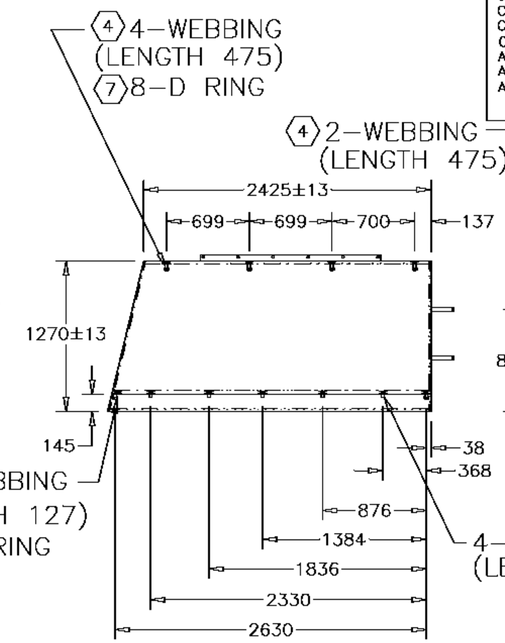


RIGHT REAR OUTSIDE PANEL

12420284-009 REF
SH 2, D4

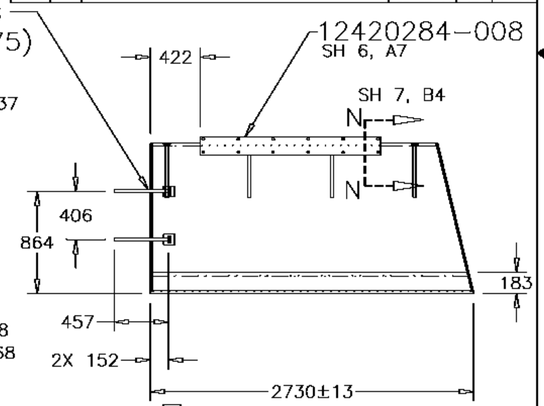


RIGHT REAR INSIDE PANEL

METRIC

PART NO. (SEE TABLE)

| REVISIONS | | | | |
|---|---|---|---|---|
| ZONE | REV | DESCRIPTION | DATE | APPROVED |
| — | — | ALL REVISIONS LISTED ON SH 1 | — | — |
| — | XB | REVISED IAW ECR 5508 | | V. TRAN |
| | | THIS SHEET ADDED | 97/03/04 | J.Y. RGT |
| — | — | -PRODUCT BASELINE- | | V. TRAN |
| | | ERR SSS-R6143 | 97/03/04 | J.Y. RGT |
| D6 | A | 62) DIM 1327 WAS 1238 | | |
| D6 | | 63) DIM 192 WAS 216 | | |
| D6 | | 64) DIM 154 WAS 178 | | |
| D5 | | 65) DIM 1173 WAS 973 | | |
| B8 | | 66) DIM 1292 WAS 1142 | | |
| B7 | | 67) DIM 183 WAS 216 | | |
| B6 | | 68) DIM 1292 WAS 1156 | | |
| B5 | | 69) DIM 145 WAS 178 | | |
| B5 | | 70) DIM 3080±13 WAS 3023±13 | | |
| B4 | | 71) DIM 145 WAS 178 | | |
| B2 | | 72) DIM 457 WAS 436 | | |
| C1 | | 73) DELETED DIM 330 | | |
| B1 | | 74) DIM 183 WAS 216 | | |
| A7 | | 75) DIM 145 WAS 178 | | |
| B6 | | 76) DIM 141 WAS 171 | | |
| B5 | | 77) DELETED DIM 330 | | |
| A5 | | 78) DIM 183 WAS 216 | | Q.BHUIYA |
| | | ERR SSS-R6257 | 98-12-31 | ADJ KEB |
| D8 | C | 55)2-12420284-009, SH6, A5 WAS 12420284-009 REF | | |
| D7 | | 56)REVISE VIEW, ADDED DIM 2X 331 & 2-12420284-001 REF WAS 12420284-011 | | |
| C8 | | 57)ADDED 5-WEBBING (LENGTH 475) | | |
| D4 | | 58)ADDED 5-WEBBING (LENGTH 127), 10-D RING & SECTION C-C | | |
| C4 | | 59)ADDED 2-FASTENER TAPE | | |
| C4 | | 60)2-D RING, 2-WEBBING (LENGTH 127) WAS 2-D RING REF | | |
| C4 | | 61)4-WEBBING (LENGTH 127) WAS 4-WEBBING REF | | |
| C8 | | 62)ADDED 3-WEBBING (LENGTH 475) | | |
| B8 | | 63)ADDED 7-WEBBING (LENGTH 127), 7-BUCKLES-12421693 | | |
| C8 | | 64)2-12420284-009, SH6,A5 WAS 12420284-REF | | |
| C6 | | 65)ADDED 3-WEBBING (LENGTH 127), 6-D RING | | |
| B4 | | 66)3-WEBBING (LENGTH 127), 3-D RING WAS 2-D RING REF | | |
| B4 | | 67)2-WEBBING (LENGTH 127) WAS 2-WEBBING REF & 2-D RING WAS 2-D RING REF | | |
| C4 | | 68)ADDED 4-WEBBING (LENGTH 475) 8-D RING | | |
| C3 | | 69)ADDED 2-WEBBING (LENGTH 475 | | |
| C3 | | 70)ADDED 4-WEBBING (LENGTH 127) | | |
| C1 | | 71)12420284-008, SH6 A7 WAS 12420284-008 REF | | |
| A7 | | 72)ADDED 3-WEBBING (LENGTH 475), 2-WEBBING (LENGTH 127) & 2-D RING WAS 2-D RING REF | | |
| A7 | | 73)4-WEBBING (LENGTH 127) WAS 4-WEBBING REF | | |
| A5 | | 74)REVISED RIGHT MIDDLE INSIDE PANEL & DISTRIBUTION C WAS A | | D.GRANTHAM |
| | | ERR SSS-U5898 | 03-02-11 | ADJ SEH |

| MECHANICAL PROPERTIES | |
|---|---|
| YP | |
| TS | |
| EL2 | |
| RA | |
| BH | |
| RH | |

PMIC A

| NEXT ASSY | USED ON |
|---|---|
| APPLICATION | |

UNLESS OTHERWISE SPECIFIED DIMENSIONS ARE IN MILLIMETERS
TOLERANCES ON
1 PLACE ± —— 2 PLACE ± ——
THIRD ANGLE PROJECTION

QA Y.STEPHENSON
MAT'L ENGR T. STORY

CONTRACT NUMBER DAAE07-92-C-R001
CONTRACTOR STEWART & STEVENSON SERVICES SEALY TEXAS U.S.A.
DRAWN BY D.L.ROBERTS — DATE (YR-MO-DA) 93-01-30
CHECKER D.CORNWELL — ENGINEER R.NAWROCKI
DRAWING APPROVAL - GOV'T M.GRACE
DESIGN APPROVAL - GOV'T M.GRACE

DESIGN ACTIVITY U.S. ARMY, TANK AUTOMOTIVE COMMAND WARREN, MICHIGAN 48397-5000

COVER, ASSEMBLY, FITTED, MTV/LWB

SIZE D — CAGE CODE 19207 — DWG NO 12420284
SCALE 1/25 — UNIT WT —— — SHEET 5

FILE NAME: 0284C05.DWG — TACOM-D-METRIC

DISTRIBUTION STATEMENT C:
DISTRIBUTION AUTHORIZED TO U.S. GOVERNMENT AGENCIES AND THEIR CONTRACTORS.
REASON: ADMINISTRATIVE OR OPERATIONAL USE.
DATE OF DETERMINATION: 02-12-11
OTHER REQUESTS FOR THIS DOCUMENT SHALL BE REFERRED TO THE U.S. ARMY TANK AUTOMOTIVE AND ARMAMENTS COMMAND, ATTN: SFAE-CSS-MT. WARREN, MICHIGAN 48397-5000.

DESTRUCTION NOTICE: FOR UNCLASSIFIED, LIMITED DOCUMENTS, DESTROY BY ANY METHOD THAT WILL PREVENT DISCLOSURE OF CONTENTS OR RECONSTRUCTION OF THE DOCUMENT.