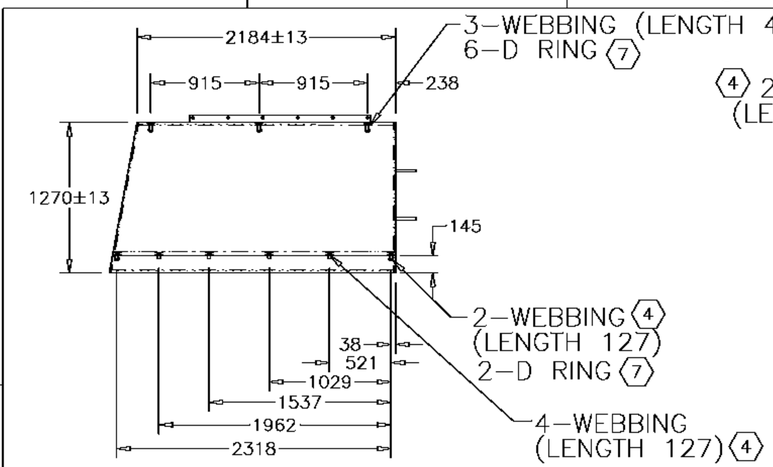

RIGHT FRONT OUTSIDE PANEL

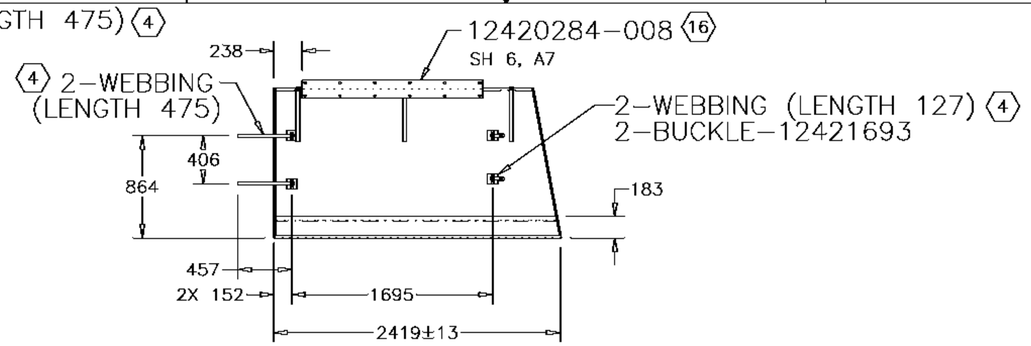

RIGHT FRONT INSIDE PANEL

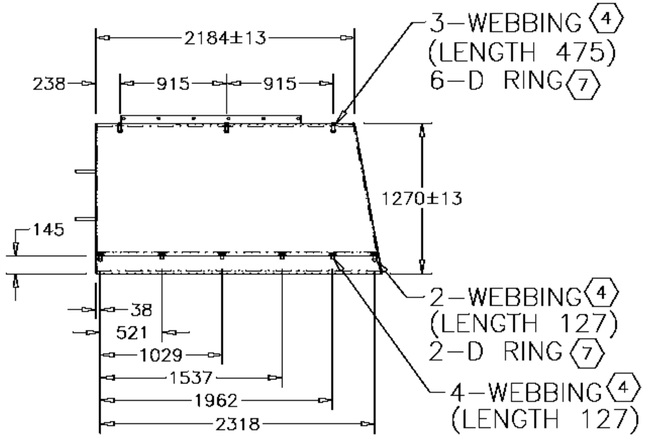

LEFT FRONT OUTSIDE PANEL

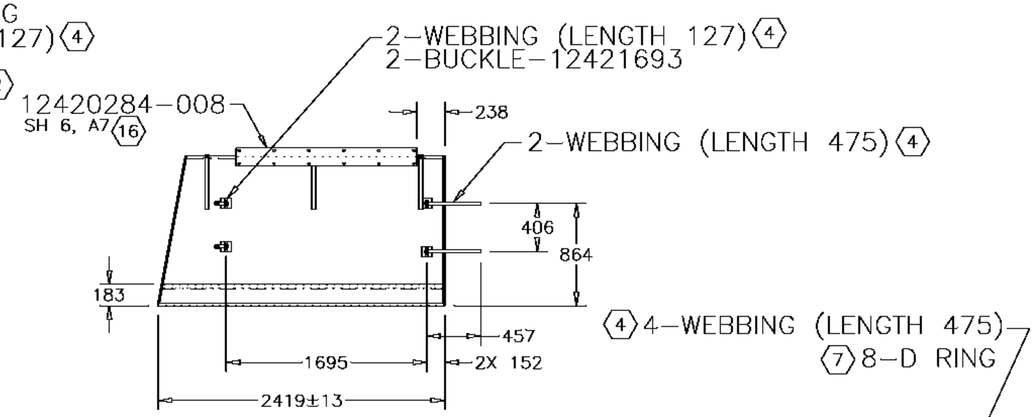

LEFT FRONT INSIDE PANEL

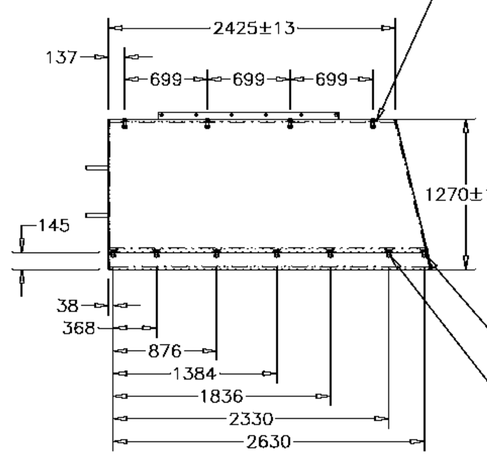

LEFT REAR OUTSIDE PANEL

12420284–008 REF (2)
SH 2, B4

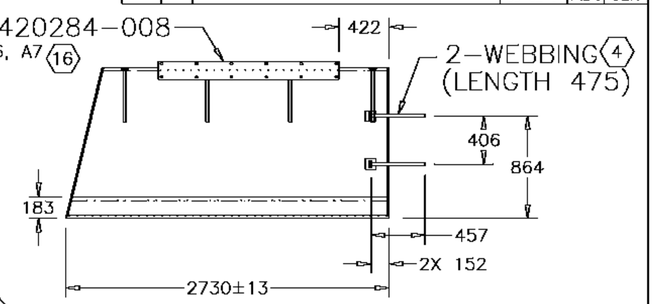

LEFT REAR INSIDE PANEL

METRIC

PART NO. (SEE TABLE)

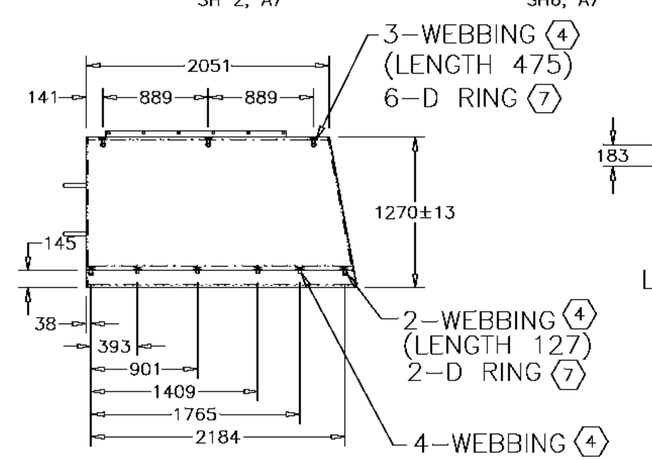

LEFT MIDDLE OUTSIDE PANEL

12420284–004 REF (2)
SH 2, A7

12420284–006 REF (2)
SH 2, B5

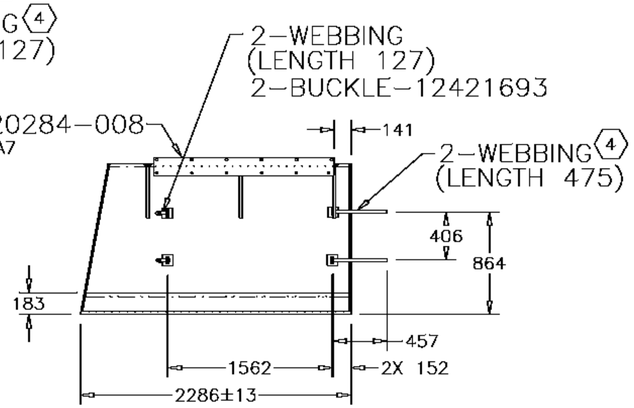

LEFT MIDDLE INSIDE PANEL

DISTRIBUTION STATEMENT C:
DISTRIBUTION AUTHORIZED TO U.S. GOVERNMENT AGENCIES AND THEIR CONTRACTORS.
REASON: ADMINISTRATIVE OR OPERATIONAL USE.
DATE OF DETERMINATION: 02–12–11
OTHER REQUESTS FOR THIS DOCUMENT SHALL BE REFERRED TO THE U.S. ARMY TANK AUTOMOTIVE AND ARMAMENTS COMMAND, ATTN: SFAE–CSS–MT. WARREN, MICHIGAN 48397–5000.

DESTRUCTION NOTICE: FOR UNCLASSIFIED, LIMITED DOCUMENTS, DESTROY BY ANY METHOD THAT WILL PREVENT DISCLOSURE OF CONTENTS OR RECONSTRUCTION OF THE DOCUMENT.

REVISIONS

ZONE	REV	DESCRIPTION	DATE	APPROVED
—	—	ALL REVISIONS LISTED ON SH 1	—	—
—	XB	REVISED IAW ECR 5508		V. TRAN
		THIS SHEET ADDED	97/03/04	J.Y. RGT
—	—	–PRODUCT BASELINE–		V. TRAN
		ERR SSS–R6143	97/03/04	J.Y. RGT
D7	A	42) DIM 238 WAS 203		
D7		43) DIM 145 WAS 178		
D6		44) DELETED DIM 203		
D5		45) DELETED DIM 330		
D5		46) DIM 183 WAS 216		
D6		47) DIM 457 WAS 436		
C8		48) DIM 238 WAS 203		
C8		49) DIM 145 WAS 178		
C6		50) DELETED DIM 330		
C5		51) DELETED DIM 203		
B7		52) DIM 183 WAS 216		
A8		53) DIM 145 WAS 178		
B6		54) DELETED DIM 330		
B5		55) DIM 141 WAS 171		
A5		56) DIM 457 WAS 436		
A7		57) DIM 183 WAS 216		
B4		58) DIM 145 WAS 178		
B4		59) DIM 1836 WAS 1842		
B3		60) DIM 183 WAS 216		
B3		61) DELETED DIM 330		Q.BHUIYA
		ERR SSS–R6257	98–12–31	ADJ KEB
D7	C	31)ADDED 3–WEBBING (LENGTH 475) & 6–D RING CALLOUT		
D6		32)ADDED 2–WEBBING (LENGTH 475)		
D7		33)2–WEBBING (LENGTH 127), 2–D RING WAS 2–D RING REF		
C6		34)4–WEBBING (LENGTH 127) WAS 4–WEBBING REF		
D5		35)12420284–008, SH6, A7 WAS 12420284–008 REF		
D4		36)ADDED 2–WEBBING (LENGTH 127), 2–BUCKLE–12421693		
C7		37)ADDED 3–WEBBING (LENGTH 475), 6–D RING		
B7		38)2–WEBBING (LENGTH 127), 2–D RING WAS 2–D RING REF		
B7		39)4–WEBBING (LENGTH 127) WAS 4–WEBBING REF		
B7		40)ADDED 3–WEBBING (LENGTH 475) 6–D RING CALLOUT		
B6		41)12420284–008, SH6, A7 WAS 12420284–008 REF		
B5		42)ADDED 2–WEBBING (LENGTH 127),2–BUCKLE–12421693 & REVISED VIEW		
B5		43)ADDED 2–WEBBING (LENGTH 475) CALLOUT		
C6		44)12420284–008, SH6, A7 WAS 12420284–008 REF		
A7		45)2–WEBBING (LENGTH 127), 2–D RING WAS 2–D RING REF		
A7		46)4–WEBBING (LENGTH 127) WAS 4–WEBBING REF		
C5		47)ADDED 2–WEBBING (LENGTH 127), 2–BUCKLE–12421693		
C4		48)ADDED 2–WEBBING (LENGTH 475)		
C3		49)ADDED 4–WEBBING (LENGTH 475), 8–D RING CALLOUT		
B6		50)12420284–008, SH6, A7 WAS 12420284–008 REF		
B1		51)ADDED 2–WEBBING (LENGTH 475)		
A2		52)2–WEBBING (LENGTH 127), 2–D RING WAS 2–D RING REF		
A2		53)5–WEBBING (LENGTH 127) WAS 5–WEBBING REF		
A5		54)DISTRIBUTION STATEMENT C WAS A		D.GRANTHAM
		ERR SSS–U5898	03–02–11	ADJ SEH

MECHANICAL PROPERTIES	
YP	
TS	
EL2	
RA	
BH	
RH	

PMIC A

NEXT ASSY | USED ON
APPLICATION

UNLESS OTHERWISE SPECIFIED DIMENSIONS ARE IN MILLIMETERS
TOLERANCES ON
1 PLACE ± — 2 PLACE ± —

THIRD ANGLE PROJECTION

QA Y.STEPHENSON
MAT'L ENGR T. STORY

CONTRACT NUMBER DAAE07–92–C–R001
CONTRACTOR STEWART & STEVENSON SERVICES SEALY TEXAS U.S.A.

DRAWN BY D.L.ROBERTS | DATE (YR–MO–DA) 93–01–30
CHECKER D.CORNWELL | ENGINEER R.NAWROCKI
DRAWING APPROVAL – GOV'T M.GRACE
DESIGN APPROVAL – GOV'T M.GRACE

DESIGN ACTIVITY U.S. ARMY, TANK AUTOMOTIVE COMMAND WARREN, MICHIGAN 48397–5000

COVER, ASSEMBLY, FITTED, MTV/LWB

SIZE D | CAGE CODE 19207 | DWG NO 12420284
SCALE 1/25 | UNIT WT — | SHEET 4

FILE NAME: 0284CD4.DWG TACOM–D–METRIC