REVISIONS				
ZONE	REV	DESCRIPTION	DATE	APPROVED
—	—	ALL REVISIONS LISTED ON SH 1	—	—
—	XØ	-ALLOCATED BASELINE-	—	—
—	XB	REVISED & REDRAWN IAW ECR 5508	97/03/04	V. TRAN J.Y. RGT
—	—	-PRODUCT BASELINE- ERR SSS-R6143	97/03/04	V. TRAN J.Y. RGT
D7 D4 C4 B4 C5 C2 B7 A7	A	33) 4-WEBBING WAS 8-WEBBING 4-BUCKLE WAS 8-BUCKLE 34) 6-WEBBING WAS 12-WEBBING 35) 6-12420284-008 WAS 9-12420284-008 36) 13-12420284-009 WAS 4-12420284-009 37) DELETED DIM 2X 454 38) REVISE TOP VIEW-INSIDE GEOMETRY 39) HEX 6 WAS HEX 5 40) ADDED WEBBING CALLOUT 41) ADDED WEBBING & BUCKLE CALLOUT ERR SSS-R6257	98-12-31	Q.BHUIYA ADJ KEB
C3	B	4) 4- GROMMET (5) WAS 5- GROMMET (5) ERR SSS U2395R1	99-08-11	Q.BHUIYA ADJ KEB
D7 D7 D8 D5 D3 C3 C3 C4 C3 C2 B3 B7 A7 B8 A5	C	17)DELETED 4-WEBBING (LENGTH 127) & 4-BUCKLE-12421693 CALLOUT 18)DELETED 6-WEBBING (LENGTH 457) CALLOUT 19)DELETED 3-WEBBING (LENGTH 457) 20)DELETED 25-12420284-012, SH 6 A3 CALLOUT 21)DELETED 6-12420284-008 SH 6 A7 CALLOUT 22)DELETED 5-WEBBING (LENGTH 457) 23)ADDED SEE VIEW Y FOR CORD ROUTING SH8 CALLOUT 24)DELETED 13-12420284-009 SH 6, A5 CALLOUT 25)REVISED REAR VIEW & DELETED 4-GROMMET CALLOUT 26)DELETED SEE VIEW L SH 7, A6 CALLOUT 27)DELETED 6 WEBBING (LENGTH 457) CALLOUT 28)DELETED 4-WEBBING (LENGTH 127) & 4-BUCKLE-124421693 CALLOUT 29)DELETED 7-WEBBING (LENGTH 127) & 7-BUCKLE-12421693 CALLOUT 30)DISTRIBTUTION STATEMENT C WAS A ERR SSS-U5898	03-02-11	D.GRANTHAM ADJ SEH

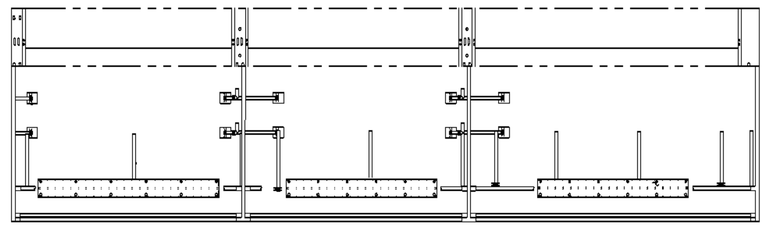

LEFT VIEW-INSIDE

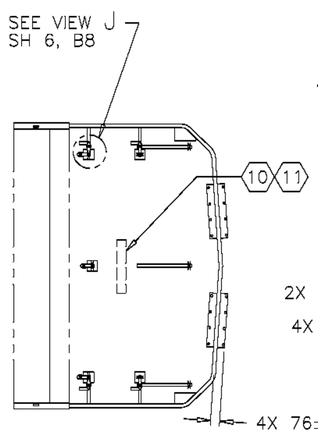

FRONT VIEW-INSIDE

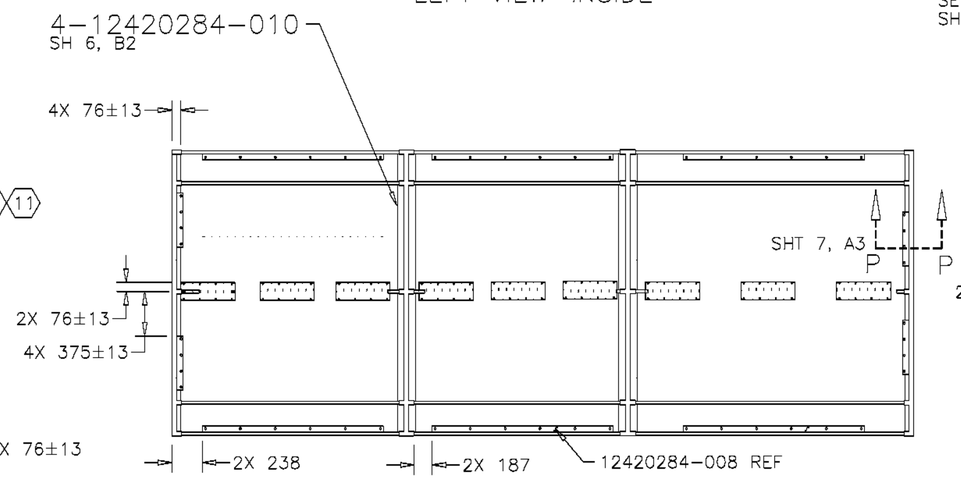

TOP VIEW-INSIDE

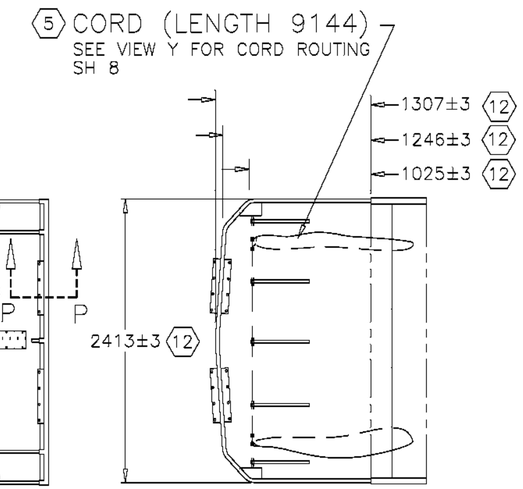

REAR VIEW-INSIDE

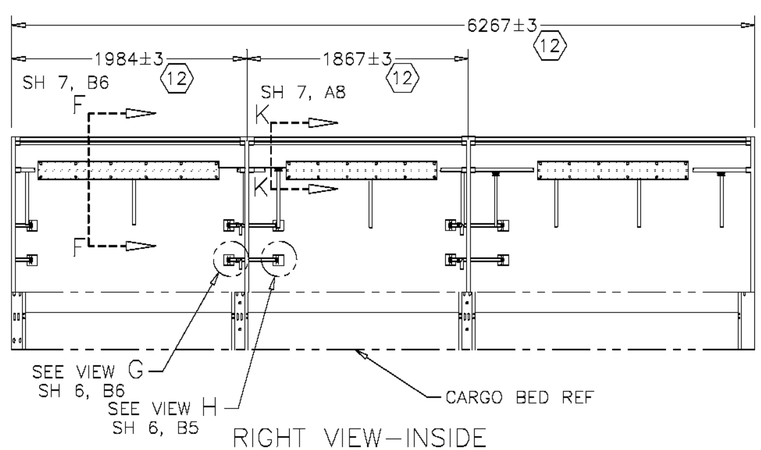

RIGHT VIEW-INSIDE

FRONT OF VEHICLE

METRIC

PART NO. (SEE TABLE)

DISTRIBUTION STATEMENT C:
DISTRIBUTION AUTHORIZED TO U.S. GOVERNMENT AGENCIES AND THEIR CONTRACTORS.
REASON: ADMINISTRATIVE OR OPERATIONAL USE.
DATE OF DETERMINATION: 02-12-11
OTHER REQUESTS FOR THIS DOCUMENT SHALL BE REFERRED TO THE U.S. ARMY TANK AUTOMOTIVE AND ARMAMENTS COMMAND, ATTN: SFAE-CSS-MT. WARREN, MICHIGAN 48397-5000.

DESTRUCTION NOTICE: FOR UNCLASSIFIED, LIMITED DOCUMENTS, DESTROY BY ANY METHOD THAT WILL PREVENT DISCLOSURE OF CONTENTS OR RECONSTRUCTION OF THE DOCUMENT.

MECHANICAL PROPERTIES	
YP	
TS	
EL2	
RA	
BH	
RH	

PMIC A

NEXT ASSY | USED ON
APPLICATION

UNLESS OTHERWISE SPECIFIED DIMENSIONS ARE IN MILLIMETERS
TOLERANCES ON
1 PLACE ± — 2 PLACE ± —

THIRD ANGLE PROJECTION

QA Y.STEPHENSON
MAT'L ENGR T. STORY

CONTRACT NUMBER DAAE07-92-C-R001
CONTRACTOR STEWART & STEVENSON SERVICES SEALY TEXAS U.S.A.
DRAWN BY D.L. ROBERTS — DATE (YR-MO-DA) 93-01-30
CHECKER D.CORNWELL — ENGINEER R. NAWROCKI
DRAWING APPROVAL - GOV'T M.GRACE
DESIGN APPROVAL - GOV'T M.GRACE

DESIGN ACTIVITY U.S. ARMY, TANK AUTOMOTIVE COMMAND WARREN, MICHIGAN 48397-5000

COVER, ASSEMBLY, FITTED, MTV/LWB

SIZE D — CAGE CODE 19207 — DWG NO 12420284
SCALE 1/25 — UNIT WT — SHEET 3

FILE NAME: 0284CD3.DWG 1 TACOM-D-METRIC