REVISIONS				
ZONE	REV	DESCRIPTION	DATE	APPROVED
—	XØ	–ALLOCATED BASELINE–	——	——
—	XA	REVISED IAW NOR–3876–1	96–10–24	K.PHILLIPS V.T. D.A.W
—	XB	REVISED IAW ECR 5508	97–03–11	V. TRAN J.Y. D.G.
—	–	– PRODUCT BASELINE – ERR SSS–R6143	97–03–11	V. TRAN J.Y. D.G.
B4 C4 C5 A3	A	REVISED IAW DEV. D424 1) REVISE DIMENSION FROM: 27.94 TO: 27.9 2) REVISE DIMENSION FROM: 25.91 TO: 25.9 3) REVISE DIMENSION FROM: 36.07 TO: 36.1 4) ADD 2 PLACE TOLERANCE 0.30 ERR SSS–U5746	01–09–06	P.MARTIN JMM SRB

NOTES:

1. APPLICABLE STANDARDS/SPECIFICATIONS:
   A. DOD–STD–00100D(AR)
   B. ANSI Y14.5M–1982
2. MATERIAL: ACETAL, (DUPONT DELRIN)

	MELT FLOW RATE (%)	ASTM
TENSILE ELONGATION AT BREAK (5.1 mm/MIN)		
–55°C	15	D638
–100°C	250	D638
TENSILE STRENGTH (5.1 mm/MIN)		
–55°C	101	D638
+100°C	36	D638
SHEAR STRENGTH		
+23°C	66	D732
FLEXURAL YIELD STRENGTH (1.3 mm/MIN)		
+23°C	97	D790
POISSON RATIO	0.35	–
TENSILE MODULUS (5.1 mm/MIN)		
+23°C	3100	D638
FLEXURAL MODULUS (1.3 mm/MIN)		
–55°C	3900	D790
+100°C	900	D790
COMPRESSIVE STRESS (1.3 mm/MIN)		
+23°C AT 1% DEF.	36	D695
+23°C AT 10% DEF.	124	D695
DEFORMATION UNDER LOAD 13.8 MPa AT +50C	0.5	D621
FLEXURAL FATIGUE ENDURANCE LIMIT 50% RH, +23°C, 10 CYCLES	31	D671
TENSILE–IMPACT STRENGTH +23°C	210	D1222 LONG
IZOD IMPACT (NOTCHED)		
–40°C	64	D256
+23°C	80	D256
IZOD IMPACT (UNOTCHED) +23°C	(NO BREAK)	D255

3. ASTM E380 APPLIES. METHOD B SHALL BE USED IN CONVERTING AND ROUNDING OFF. 1 INCH = 25.4 MILLIMETERS APPLIES.
4. IDENTIFICATION OF THE SUGGESTED SOURCE(S) OF SUPPLY HERON IS NOT TO BE CONSTRUED AS A GUARANTEE OF PRESENT OR CONTINUED AVAILABILITY AS A SOURCE OF SUPPLY FOR THE ITEM(S).

SUGGESTED SOURCE(S) OF SUPPLY				
PART NO.	VENDOR		VENDOR PART NO.	ITEM IDENTIFICATION
	ADDRESS	CAGE CODE		
12420274	ITW NEXUS 230 WEST GERRY DR. WOOD DALE, IL 60191	02768	110–0100–5614	MFR–02768–110–0100–5614

5. FIRST ARTICLE TESTING REQUIREMENTS:
   A. MATERIAL CERTIFICATION VERIFICATION.
   B. TEST SAMPLE FAILURE.
   FAILURE OF ANY TEST SAMPLE SHALL BE CAUSE FOR REJECTION OF THE ENTIRE REPRESENTATIVE PRODUCTION LOT. ITEMS SHALL NOT BE PRESENTED FOR ACCEPTANCE AFTER A FAILURE UNTIL CORRECTIVE ACTION HAS ELIMINATED THE DEFECT AND THE ROOT CAUSE OF THE FAILURE.

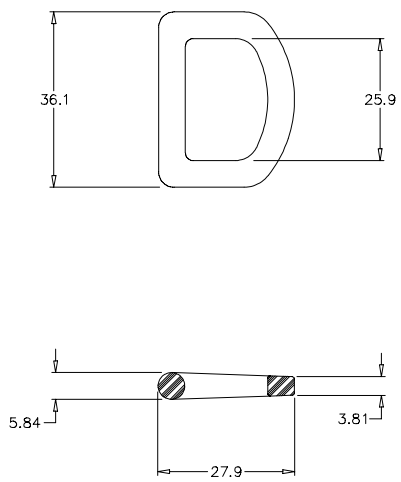

METRIC

DISTRIBUTION STATEMENT A:
APPROVED FOR PUBLIC RELEASE;
DISTRIBUTION IS UNLIMITED.

SPECIFICATION CONTROL DRAWING

PART NO. 12420274

MECHANICAL PROPERTIES: YP, TS, EL2, RA, BH, RH	PMIC A	UNLESS OTHERWISE SPECIFIED DIMENSIONS ARE IN MILLIMETERS TOLERANCES ON 1 PLACE ± 1.5 2 PLACE ± 0.30	CONTRACT NUMBER DAAE07–92–C–R001
		THIRD ANGLE PROJECTION	CONTRACTOR STEWART & STEVENSON SERVICES SEALY TEXAS U.S.A.
			DRAWN BY D.L.ROBERTS; DATE (YR–MO–DA) 93–02–04
			CHECKER D.CORNWELL; ENGINEER R.NAWROCKI
	FMTV	QA Y. STEPHENSON	DRAWING APPROVAL – GOV'T M. GRACE
	NEXT ASSY / USED ON	MAT'L ENGR T. STORY	DESIGN APPROVAL – GOV'T M. GRACE
	APPLICATION		

DESIGN ACTIVITY: U.S. ARMY, TANK AUTOMOTIVE COMMAND, WARREN, MICHIGAN 48397–5000

RING D, 1 INCH

SIZE: D; CAGE CODE: 19207; DWG NO: 12420274

SCALE: NONE; UNIT WT: ——; SHEET: ——

FILE NAME: 0274A05

TACOM–D–METRIC

FILE INFO: 0274–D5 1=25.40 06/11/1997 11:33 BHW