REVISIONS				
ZONE	REV	DESCRIPTION	DATE	APPROVED
—	—	ALL REVISIONS LISTED ON SH 1	—	—
—	-	INITIAL RELEASE -PRODUCT BASELINE- ERR SSS-R6714	—	—
A4	B	6) REPLACED DISTRIBUTION STATEMENT A ERR SSS-U7374	03-01-27	B.PUSTKA HJH BP

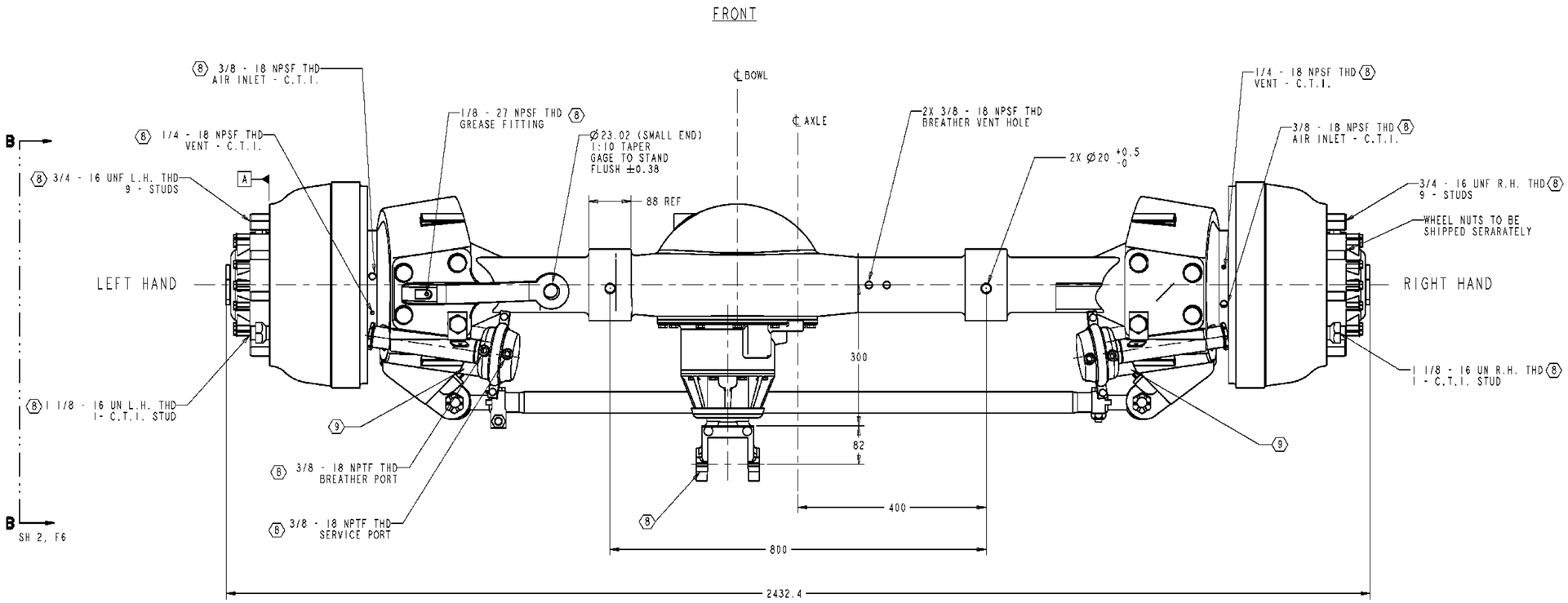

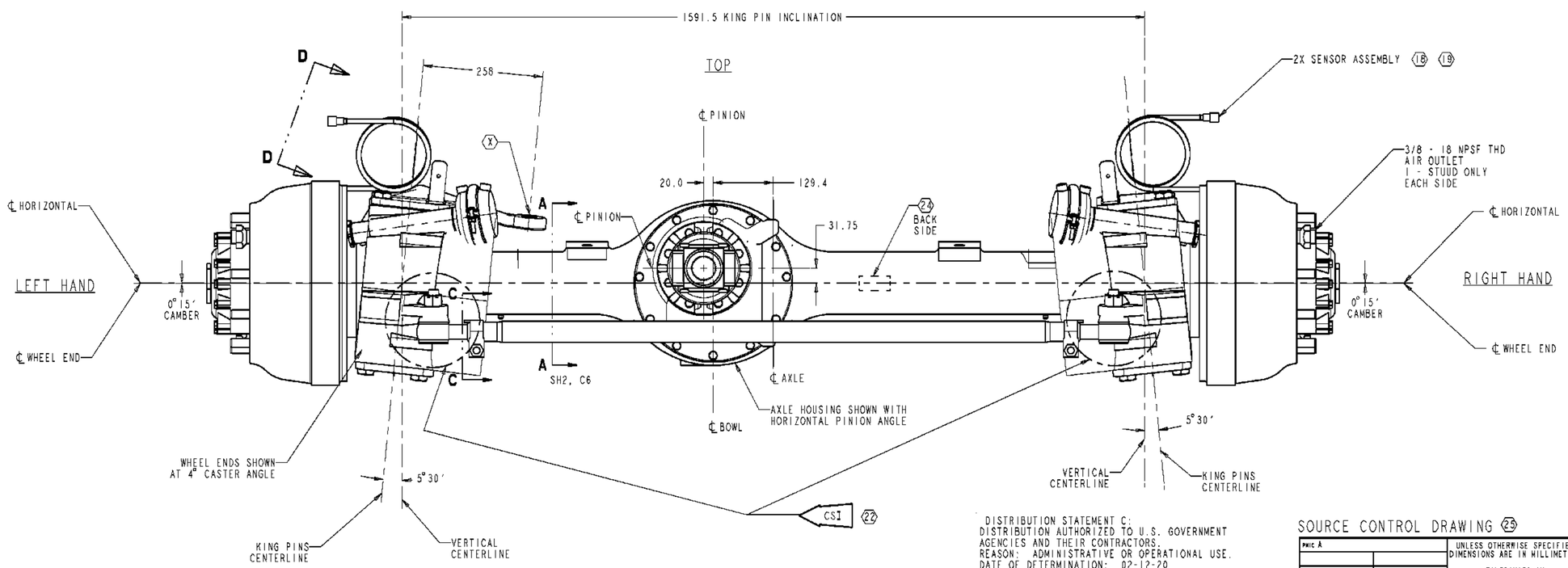

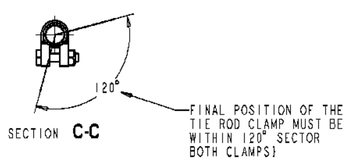

METRIC

DISTRIBUTION STATEMENT C:
DISTRIBUTION AUTHORIZED TO U.S. GOVERNMENT AGENCIES AND THEIR CONTRACTORS.
REASON: ADMINISTRATIVE OR OPERATIONAL USE.
DATE OF DETERMINATION: 02-12-20
OTHER REQUESTS FOR THIS DOCUMENT SHALL BE REFERRED TO THE U.S. ARMY TANK AUTOMOTIVE AND ARMAMENTS COMMAND, ATTN: SFAE-CSS-MT. WARREN, MICHIGAN 48397-5000.

DESTRUCTION NOTICE: FOR UNCLASSIFIED, LIMITED DOCUMENTS, DESTROY BY ANY METHOD THAT WILL PREVENT DISCLOSURE OF CONTENTS OR RECONSTRUCTION OF THE DOCUMENT.

SOURCE CONTROL DRAWING 25

PART NO. 12422745

PMIC A	UNLESS OTHERWISE SPECIFIED DIMENSIONS ARE IN MILLIMETERS TOLERANCES ON 1 PLACE ± — 2 PLACE ± —	CONTRACT NUMBER DAAE07-98-C-M005 CONTRACTOR STEWART & STEVENSON SERVICES SEALY TEXAS U.S.A.	DESIGN ACTIVITY U.S. ARMY TANK AUTOMOTIVE COMMAND WARREN, MICHIGAN 48397-5000
	THIRD ANGLE PROJECTION	DRAWN BY C.KNNACHER DATE (YR-MO-DA) 01/07/26	AXLE ASSEMBLY, FRONT, DRIVE, STEERING, ABS
		CHECKER T.FON ENGINEER T.FON	
NEXT ASSY / USED ON	QA P.FIESTER	DRAWING APPROVAL - GOV'T R.REDDY	SIZE E / CAGE CODE 19207 / DWG NO 12422745
APPLICATION	NAT'L ENGR M.CHURCH	DESIGN APPROVAL - GOV'T R.REDDY	SCALE 1/4 / UNIT WT — / SHEET 3 OF 3

FILE NAME

TACOM-E-METRIC