REVISIONS				
ZONE	REV	DESCRIPTION	DATE	APPROVED
—	—	ALL REVISIONS LISTED ON SH 1	—	—
—	-	INITIAL RELEASE -PRODUCT BASELINE- ERR SSS-R6714	—	—
C4 A4 C4	B	3) ADDED FLAG NOTE 29 CALLOUT 4) REPLACED DISTRIBUTION STATENENT A 5) DIM 1.59mm WAS 4.75m DIM 1/16" WAS 3/16" ERR SSS-U7374	03-01-27	B.PUSTKA HJH BP

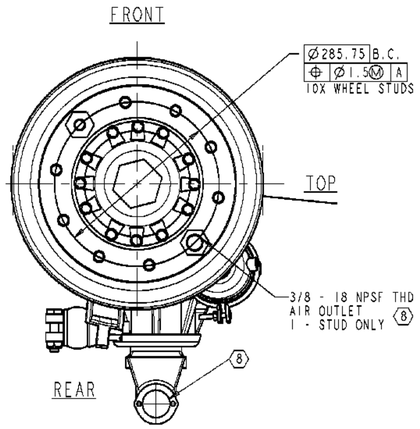

VIEW **B-B**
SH 3, F8

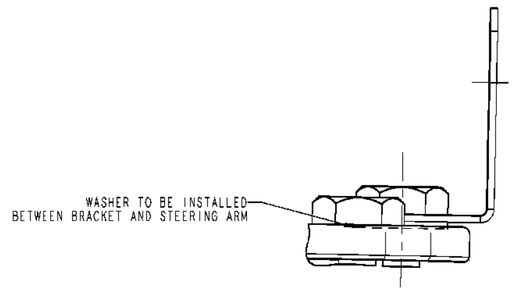

VIEW **D-D**
SCALE 1/1

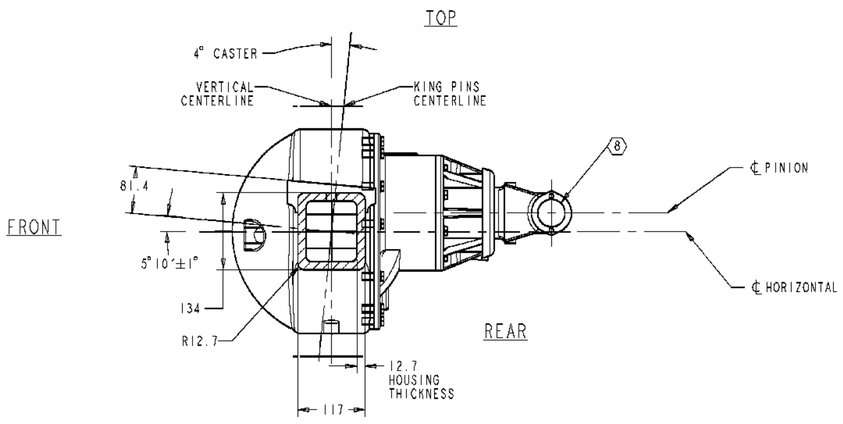

SECTION **A-A**
SH 3, C6
SHOWN WITHOUT 1°42′
AXLE INSTALLATION ANGLE
(PINION STEM UP)

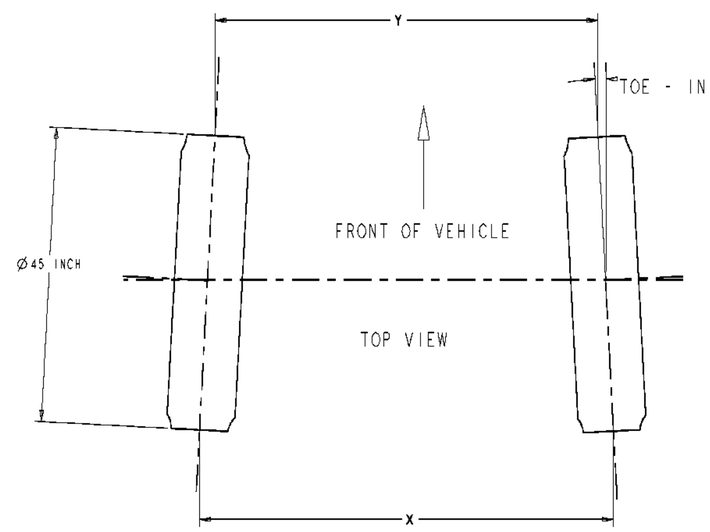

TOTAL TOE-IN = X - Y
(29) TOTAL TOE-IN = 1.59mm ±2.36mm @ 571.5mm
(1/16" ±3/32") @ (22 1/2") FROM ℄ OF AXLE

METRIC

DISTRIBUTION STATEMENT C:
DISTRIBUTION AUTHORIZED TO U.S. GOVERNMENT AGENCIES AND THEIR CONTRACTORS.
REASON: ADMINISTRATIVE OR OPERATIONAL USE.
DATE OF DETERMINATION: 02-12-20
OTHER REQUESTS FOR THIS DOCUMENT SHALL BE REFERRED TO THE U.S. ARMY TANK AUTOMOTIVE AND ARMAMENTS COMMAND, ATTN: SFAE-CSS-MT. WARREN, MICHIGAN 48397-5000.

DESTRUCTION NOTICE: FOR UNCLASSIFIED, LIMITED DOCUMENTS, DESTROY BY ANY METHOD THAT WILL PREVENT DISCLOSURE OF CONTENTS OR RECONSTRUCTION OF THE DOCUMENT.

SOURCE CONTROL DRAWING (25)

PART NO. 12422745

PWIC A	UNLESS OTHERWISE SPECIFIED DIMENSIONS ARE IN MILLIMETERS TOLERANCES ON 1 PLACE ± — 2 PLACE ± —	CONTRACT NUMBER DAAE07-98-C-M005 CONTRACTOR STEWART & STEVENSON SERVICES SEALY TEXAS U.S.A.	DESIGN ACTIVITY U.S. ARMY TANK AUTOMOTIVE COMMAND WARREN, MICHIGAN 48397-5000
	THIRD ANGLE PROJECTION	DRAWN BY C.AXMACHER / DATE (YR-MO-DA) 01/07/26	AXLE ASSEMBLY, FRONT, DRIVE, STEERING, ABS
		CHECKER T.FON / ENGINEER T.FON	
NEXT ASSY / USED ON	QA P.FIESTER	DRAWING APPROVAL - GOV'T R.REDDY	SIZE E / CAGE CODE 19207 / DWG NO 12422745
APPLICATION	MAT'L ENGR M.CHURCH	DESIGN APPROVAL - GOV'T R.REDDY	SCALE 1/4 / UNIT WT — / SHEET 2 OF 3

FILE NAME

TACOM-E-METRIC