| REVISIONS | | | | |
|---|---|---|---|---|
| ZONE | REV | DESCRIPTION | DATE | APPROVED |
| — | — | ALL REVISIONS LISTED ON SH 1 | — | — |
| — | - | INITIAL RELEASE<br>-PRODUCT BASELINE-<br>ERR SSS-R6312 | — | — |
| | F | THIS SHEET ADDED<br>ERR SSS-U7374 | 03-03-03 | B.PUSTKA<br>HJH BP |

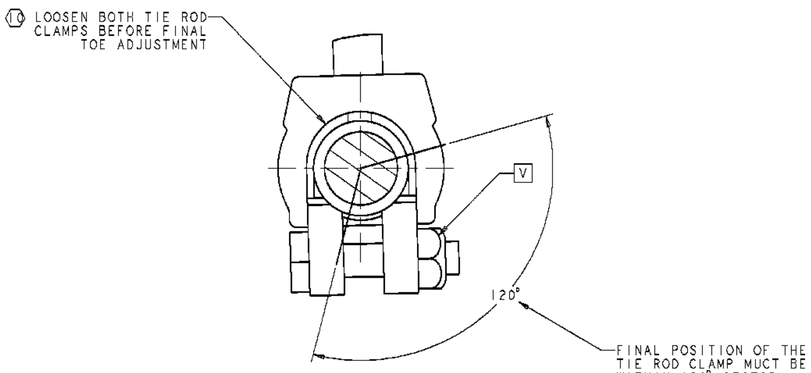


SECTION H-H
SCALE 1/1

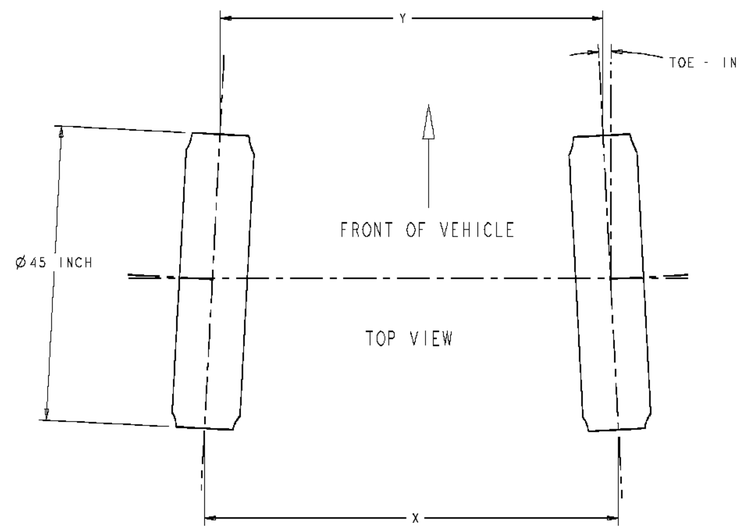


TOTAL TOE-IN = X - Y

METRIC

DISTRIBUTION STATEMENT C:
DISTRIBUTION AUTHORIZED TO U.S. GOVERNMENT AGENCIES AND THEIR CONTRACTORS.
REASON: ADMINISTRATIVE OR OPERATIONAL USE.
DATE OF DETERMINATION: 02-12-20
OTHER REQUESTS FOR THIS DOCUMENT SHALL BE REFERRED TO THE U.S. ARMY TANK AUTOMOTIVE AND ARMAMENTS COMMAND, ATTN: SFAE-CSS-MT. WARREN, MICHIGAN 48397-5000.

DESTRUCTION NOTICE: FOR UNCLASSIFIED, LIMITED DOCUMENTS, DESTROY BY ANY METHOD THAT WILL PREVENT DISCLOSURE OF CONTENTS OR RECONSTRUCTION OF THE DOCUMENT.

PART NO. 12421993

| | | | |
|---|---|---|---|
| PMIC NA | UNLESS OTHERWISE SPECIFIED DIMENSIONS ARE IN MILLIMETERS<br>TOLERANCES ON<br>1 PLACE ± —<br>2 PLACE ± — | CONTRACT NUMBER DAAE07-92-C-R001<br>CONTRACTOR STEWART & STEVENSON SERVICES SEALY TEXAS U.S.A. | DESIGN ACTIVITY U.S. ARMY TANK AUTOMOTIVE COMMAND WARREN, MICHIGAN 48397-5000 |
| | THIRD ANGLE PROJECTION | DRAWN BY B. CEVALLOS — DATE (YR-MO-DA) 97/06/06 | SUSPENSION SYSTEM INSTALLATION, FRONT |
| | | CHECKER P. VAUGHAN — ENGINEER R. BALENENE | |
| NEXT ASSY — USED ON | QA P. FIESTER | DRAWING APPROVAL - GOV'T N. TOWNSEND | SIZE E — CAGE CODE 19207 — DWG NO 12421993 |
| APPLICATION | MAT'L ENGR M. CHURCH | DESIGN APPROVAL - GOV'T N. TOWNSEND | SCALE 1/4 — UNIT WT — — SHEET 5 OF 5 |
| | | | FILE NAME — TACOM-E-METRIC |