DRAWING SIZE E

REVISIONS					
MODEL REV	DRAWING REV	ZONE	DESCRIPTION	DATE(YEAR-MO-DA)	APPROVED
—	—	—	INITIAL RELEASE -PRODUCT BASELINE- ERR SSS-R6312	-	—
	A	C5	1) BRACKET WAS 12417919 ERR SSS-R6549	00-05-17	D. GRANTHAM SEH SEH
	B	D2	15) ADDED SECTION G-G ERR SSS-R6801	00-06-12	B. BURSON TJG BB
	D	G2 F2	9) REVISED GEOMETRY 10) REVISED HARD CALLOUT FROM RESILIENT MOUNT-12418030 TO RESLIENT MOUNT-12422593 F2 11) DELETED SCREW-12422506 V F2 E3 12) DELETED COUPLING NUT-12422504 13) ADDED FLAG NOTE 9 WITH HARD CALLOUT ERR SSS-R6876	01-01-10	J. NICHOLSON MG JIN
	E	F8 F5 B8 C3	REVISED IAW DEV D974 3) ADDED HARD CALLOUT BUSHING-12417918 4) ADDED HARD CALLOUT BUSHING-12417918 5) ADDED HARD CALLOUT BUSHING-12417918 6) ADDED HARD CALLOUT BUSHING-12417918 ERR SSS-R6714	02-03-28	T. FON RR TSF
	F	A4	4) DISTRIBUTION STATEMENT C WAS A ERR SSS-U7374	03-03-03	B. PUSTKA HJH BP
	G	C6	REVISED IAW DEV D709 1) CHANGED 12417919 TO 12417919-007 ERR SSS-U7402	03-06-25	J. ROGERS RRS SC

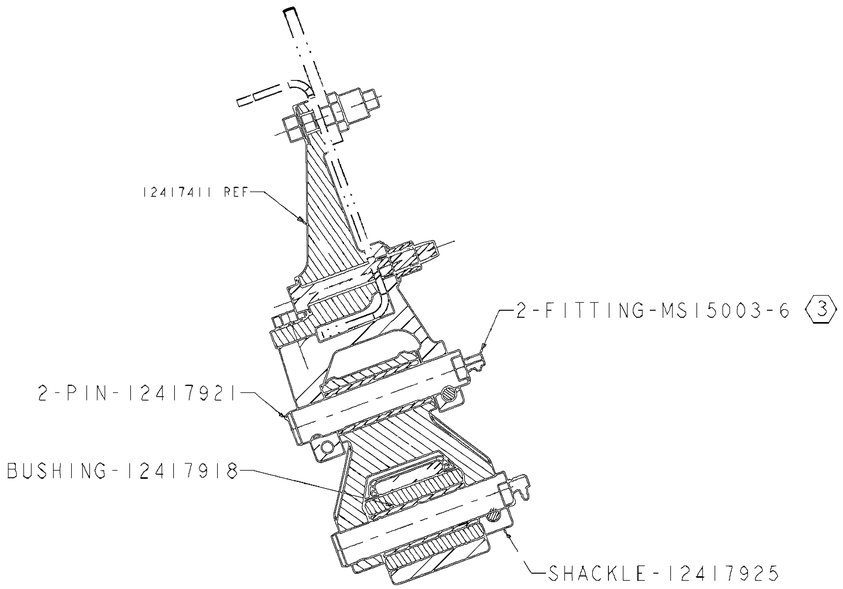

SECTION C-C
SH 2, D2
SCALE 1/2

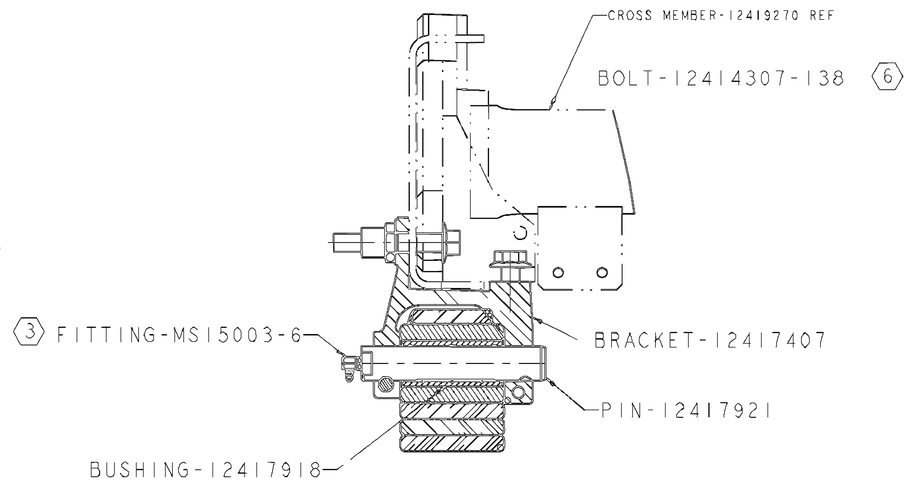

SECTION D-D
SH 2, F7
SCALE 1/2

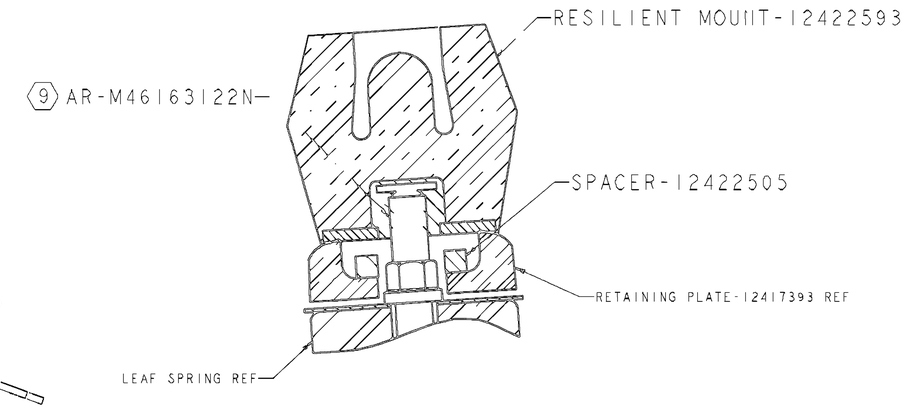

SECTION G-G
SH 3, D6
SCALE 1/1

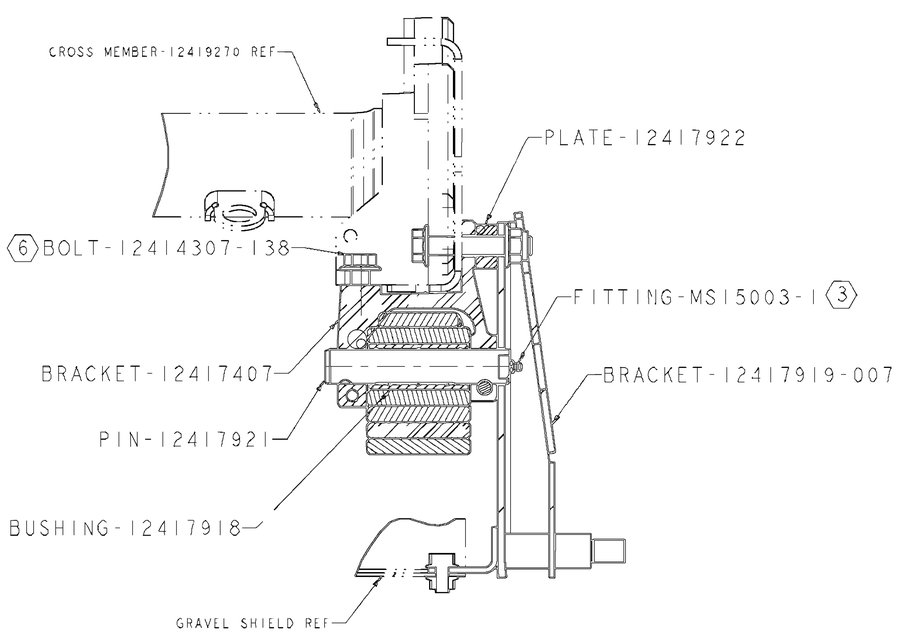

SECTION E-E
SH 3, D3
SCALE 1/2

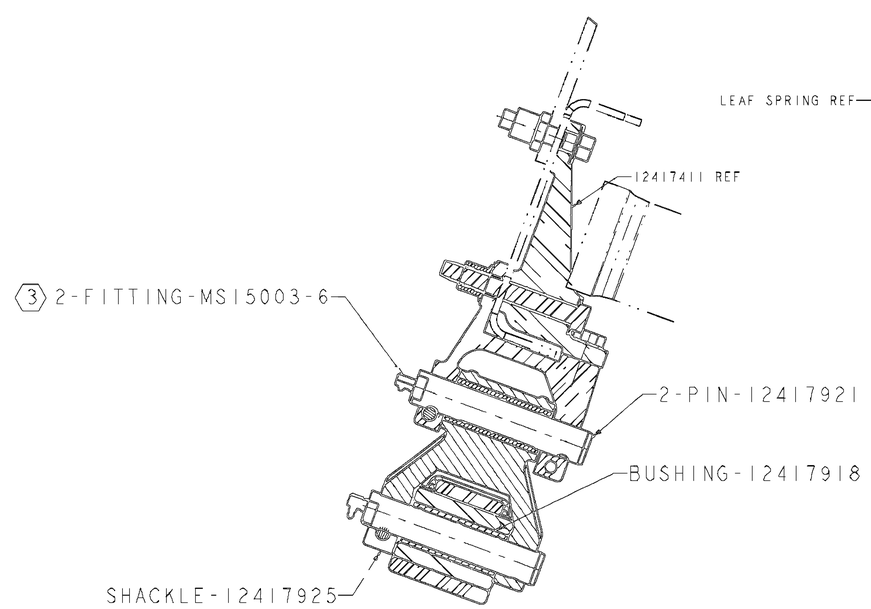

SECTION F-F
SH 3, D8
SCALE 1/2

DISTRIBUTION STATEMENT C:
DISTRIBUTION AUTHORIZED TO U.S. GOVERNMENT AGENCIES AND THEIR CONTRACTORS.
REASON: ADMINISTRATIVE OR OPERATIONAL USE.
DATE OF DETERMINATION: 02-12-20
OTHER REQUESTS FOR THIS DOCUMENT SHALL BE REFERRED TO THE U.S. ARMY TANK AUTOMOTIVE AND ARMAMENTS COMMAND, ATTN: SFAE-CSS-MT. WARREN, MICHIGAN 48397-5000.

DESTRUCTION NOTICE: FOR UNCLASSIFIED, LIMITED DOCUMENTS, DESTROY BY ANY METHOD THAT WILL PREVENT DISCLOSURE OF CONTENTS OR RECONSTRUCTION OF THE DOCUMENT.

THIS DRAWING WAS GENERATED FROM A DXF FILE. NO MODELS USED.

PART NO. 12421993

PMIC NA			METRIC DO NOT SCALE DRAWING	CONTRACT NUMBER DAAE07-92-C-R001	DESIGN ACTIVITY U.S. ARMY, TANK AUTOMOTIVE COMMAND WARREN, MICHIGAN 48397-5000
MECHANICAL PROPERTIES			UNLESS OTHERWISE SPECIFIED DIMENSIONS ARE IN MILLIMETERS TOLERANCES ON ANGLES ± ° 1 PLACE DECIMALS ± 2 PLACE DECIMALS ±	CONTRACTOR STEWART & STEVENSON SERVICES	
YP				DRAWN BY B. CEVALLOS; DATE (YR-MO-DA) 97-06-06	SUSPENSION SYSTEM INSTALLATION, FRONT
TS			THIRD ANGLE PROJECTION	CHECKER P. VAUGHAN; ENGINEER R. BALENENE	
EL2				ENGINEER; QUALITY ENGINEER P. FIESTER	
RA				DRAWING APPROVAL M. TOWNSEND	SIZE E; CAGE CODE 19207; DWG NO 12421993
BH	NEXT ASSY	USED ON	MATL ENGR M. CHURCH; MODELED BY	DESIGN APPROVAL M. TOWNSEND	
RH	APPLICATION				SCALE 1/4; UNIT WT. Kg REF; SHEET 4 OF 5

FORMAT: E_FMTV_MET_1_2