REVISIONS				
ZONE	REV	DESCRIPTION	DATE	APPROVED
		ALL REVISIONS LISTED ON SH 1		
—	-	-INITIAL RELEASE- -PRODUCT BASELINE- ERR SSS-R6312	—	—
D6 D5 D4 C4 D5 D6- D3	B	9) ADDED RESILIENT MOUNT 10) REVISED CALLOUT WAS P/N 12417395 11) REVISED CALLOUT WAS P/N 12417277 12) REVISED CALLOUT WAS P/N 12417904-002 13) ADDED VIEW G-G CALLOUT 14) REVISED SPRING GEOMETRY TO 4-LEAF SPRING WAS 3-LEAF SPRING ERR SSS-R6801	00-06-12	B. BURSON TJG BB
F7 F7 F8	C	REVISED IAW DEV D574-21: 6) REVISED CALLOUT FROM 2-BOLT-12378594-007 2-COLLAR-12378600-003 TO 2-BOLT-12422435-002 2-COLLAR-12422433-002 7) REVISED CALLOUT FROM BOLT-12378594-015 COLLAR-12378600-003 TO BOLT-12422435-005 COLLAR-12422433-002 8) REVISED CALLOUT FROM 2-BOLT-12378593-002 2-COLLAR-12378600-001 TO 2-BOLT-12422437-001 2-COLLAR-12422433-001 ERR SSS-R8840	00-08-09	R. DEHRENS MG KJR
D5 D4	D	7) REVISED GEOMETRY 8) REVISED HARD CALLOUT FROM SPRING-12422509 TO SPRING-12422509-001 ERR SSS-R6876	01-01-10	J. NICHOLSON MG JIN
C5	E	REVISED IAW D574 2) REVISED HARD CALLOUT FROM : AXLE-12414246 REF TO : AXLE-12422745 REF ERR SSS-R6714	02-03-28	T. FON RR TSF
F7 F7 F7 A4	F	REVISED IAW DEV D1025 9) 2-BOLT-12422898-004 & 2-COLLAR-12422899 WAS BOLT-12422435-005 & COLLAR-12422433-002 10) 12422898-003 & 12422899 WAS 12422435-002 & 12422433-002 11) BOLT-12422898-004 & COLLAR-12422899 WAS 2-BOLT-12422898-004 & 2-COLLAR-12422899 12) DISTRIBUTION C WAS A ERR SSS-U7374	03-03-03	B. PUSTKA HJH BP

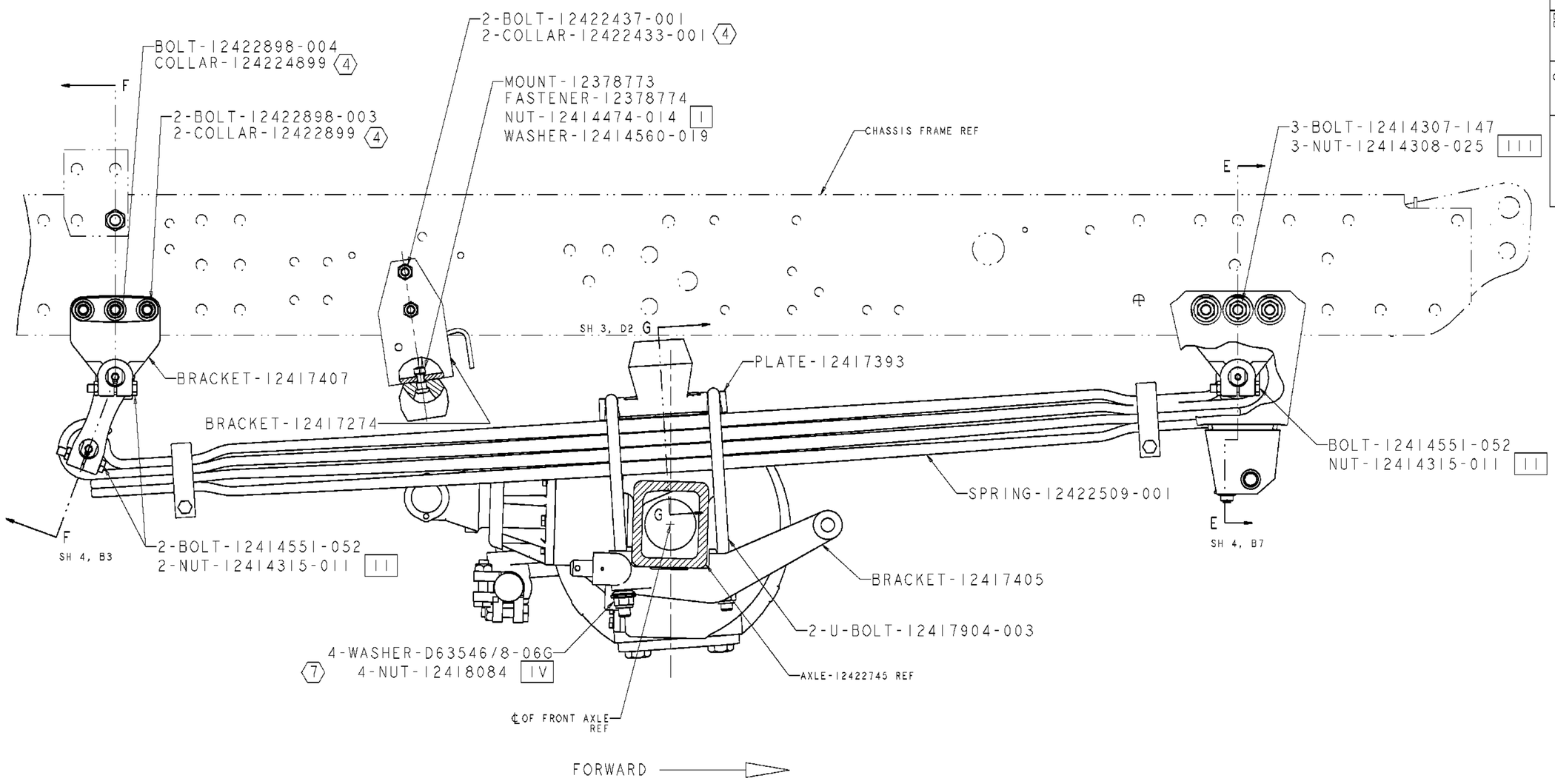

SECTION B-B
SH 1, F2
ROTATED 180°
SCALE 3/8

METRIC

DISTRIBUTION STATEMENT C:
DISTRIBUTION AUTHORIZED TO U.S. GOVERNMENT AGENCIES AND THEIR CONTRACTORS.
REASON: ADMINISTRATIVE OR OPERATIONAL USE.
DATE OF DETERMINATION: 02-12-20
OTHER REQUESTS FOR THIS DOCUMENT SHALL BE REFERRED TO THE U.S. ARMY TANK AUTOMOTIVE AND ARMAMENTS COMMAND, ATTN: SFAE-CSS-MT. WARREN, MICHIGAN 48397-5000.

DESTRUCTION NOTICE: FOR UNCLASSIFIED, LIMITED DOCUMENTS, DESTROY BY ANY METHOD THAT WILL PREVENT DISCLOSURE OF CONTENTS OR RECONSTRUCTION OF THE DOCUMENT.

PART NO. 12421993

PMIC NA	UNLESS OTHERWISE SPECIFIED DIMENSIONS ARE IN MILLIMETERS TOLERANCES ON 1 PLACE ± 2 PLACE ±	CONTRACT NUMBER DAAE07-92-C-R001 CONTRACTOR STEWART & STEVENSON SERVICES SEALY TEXAS U.S.A.	DESIGN ACTIVITY U.S. ARMY TANK AUTOMOTIVE COMMAND WARREN, MICHIGAN 48397-5000
	THIRD ANGLE PROJECTION	DRAWN BY B. CEVALLOS / DATE (YR-MO-DA) 97/06/06	SUSPENSION SYSTEM INSTALLATION, FRONT
		CHECKER P. VAUGHAN / ENGINEER R. BALENENE	
NEXT ASSY / USED ON	QA P. FIESTER	DRAWING APPROVAL - GOV'T M. TOWNSEND	SIZE E / CAGE CODE 19207 / DWG NO 12421993
APPLICATION	MAT'L ENGR M. CHURCH	DESIGN APPROVAL - GOV'T M. TOWNSEND	SCALE 1/4 / UNIT WT — / SHEET 3 OF 5

FILE NAME 1993DEM

TACOM-E-METRIC