REVISIONS				
ZONE	REV	DESCRIPTION	DATE	APPROVED
		ALL REVISIONS LISTED ON SH 1		
—	-	-INITIAL RELEASE- -PRODUCT BASELINE- ERR SSS-R6312	—	—
D5 D6 C6 D7- D2	B	4) ADDED RESILIENT MOUNT 5) REVISED CALLOUT WAS P/N 12417395 6) REVISED CALLOUT WAS P/N 12422509 7) REVISED CALLOUT WAS P/N 12417904-003 8) REVISED SPRING GEOMETRY TO SHOW 4-LEAF SPRING WAS 3-LEAF SPRING ERR SSS-R6801	00-06-12	H. HURSON JGI BP
F6 F5 F3 F3	C	REVISED IAW DEV D574-21: 2) REVISED CALLOUT FROM 2-BOLT-12378594-007 2-COLLAR-12378800-003 TO 2-BOLT-12422435-003 2-COLLAR-12422433-002 3) REVISED CALLOUT FROM 2-BOLT-12378593-002 2-COLLAR-12378800-001 TO 2-BOLT-12422437-001 2-COLLAR-12422433-001 4) REVISED CALLOUT FROM 2-BOLT-12378594-007 2-COLLAR-12378800-003 TO 2-BOLT-12422435-002 2-COLLAR-12422433-002 5) REVISED CALLOUT FROM BOLT-12378594-015 COLLAR-12378600-003 TO BOLT-12422435-005 COLLAR-12422433-002 ERR SSS-R6840	00-08-09	R. BEHRENS MG KJR
D5 D6	D	5) REVISED GEOMETRY 6) REVISED HARD CALLOUT FROM SPRING-12422509 TO SPRING-12422509-001 ERR SSS-R6878	01-01-10	J. NICHOLSON MG JJN
C4	E	REVISED IAW D974 1) REVISED HARD CALLOUT FROM : AXLE-12421818 TO : AXLE-12422745 ERR SSS-R8714	02-03-28	T. FON RR JSF
F3 F2 F2 A4	F	REVISED IAW DEV D1025 5) 12422898-003 & 12422899 WAS 12422435-002 & 12422433-002 6) 2-BOLT-12422898-004 & 2-COLLAR-12422899 WAS BOLT-12422435-005 & COLLAR-12422433-002 7) BOLT-12422898-004 & COLLAR-12422899 WAS 2-BOLT-12422898-004 & 2-COLLAR-12422899 8) DISTRIBUTION STATEMENT C WAS A ERR SSS-U7374	03-03-03	R. PUSTKA JJH BP

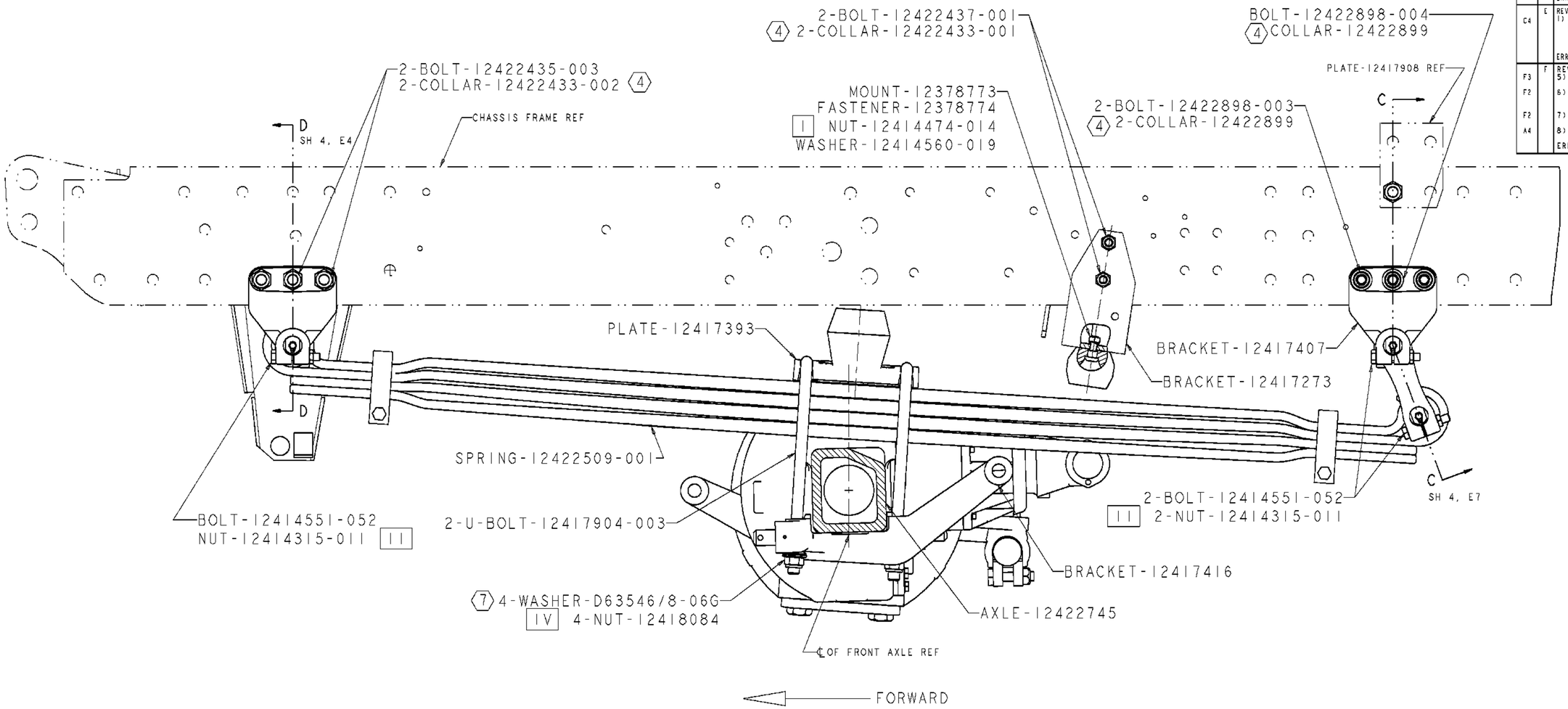

SECTION A-A
SH 1, D2
SCALE: 3/8

METRIC

DISTRIBUTION STATEMENT C:
DISTRIBUTION AUTHORIZED TO U.S. GOVERNMENT AGENCIES AND THEIR CONTRACTORS.
REASON: ADMINISTRATIVE OR OPERATIONAL USE.
DATE OF DETERMINATION: 02-12-20
OTHER REQUESTS FOR THIS DOCUMENT SHALL BE REFERRED TO THE U.S. ARMY TANK AUTOMOTIVE AND ARMAMENTS COMMAND, ATTN: SFAE-CSS-MT. WARREN, MICHIGAN 48397-5000.

DESTRUCTION NOTICE: FOR UNCLASSIFIED, LIMITED DOCUMENTS, DESTROY BY ANY METHOD THAT WILL PREVENT DISCLOSURE OF CONTENTS OR RECONSTRUCTION OF THE DOCUMENT.

PART NO. 12421993

PWIC NA	UNLESS OTHERWISE SPECIFIED DIMENSIONS ARE IN MILLIMETERS TOLERANCES ON 1 PLACE ±— 2 PLACE ±—	CONTRACT NUMBER DAAE07-92-C-R001 CONTRACTOR STEWART & STEVENSON SERVICES SEALY TEXAS U.S.A.	DESIGN ACTIVITY U.S. ARMY TANK AUTOMOTIVE COMMAND WARREN, MICHIGAN 48397-5000
	THIRD ANGLE PROJECTION	DRAWN BY B. CEVALLOS — DATE (YR-MO-DAY) 97/06/06	SUSPENSION SYSTEM INSTALLATION, FRONT
		CHECKER P. VAUGHAN — ENGINEER R. BALENENE	
	QA P. FIESTER	DRAWING APPROVAL - GOV'T M. TOWNSEND	SIZE E — CAGE CODE 19207 — DWG NO 12421993
NEXT ASSY — USED ON	MAT'L ENGR M. CHURCH	DESIGN APPROVAL - GOV'T M. TOWNSEND	SCALE 1/4 — UNIT WT — — SHEET 2 OF 5
APPLICATION			FILE NAME 1993DEM — TACOM-E-METRIC