REVISIONS					
ZONE	LTR	DESCRIPTION	DATE	APPROVED	
		REPLACES WITH CHANGE DWG 97403-13211E9102 REV J TAC U-7299	03-03-24	KM	JB

NOTES:

1. PRIME WITH EPOXY
   DRY FILM THKNS 1.0 TO 1.5 MILS
   SPEC MIL-P-53022 OR
   MIL-P-53030
   TOPCOAT COLOR GLOSS WHITE
   PER SPEC MIL-C-22750
   DRY FILM THKNS 1.0 MILS MIN
2. APPLY PER MIL-STD-130:
   19207ASSY12481062
   MFR-1 ——— MFR CAGE CODE
   METHOD OPTIONAL
3. HOLES AND INDICATED SURFACES TO BE FREE OF PRIME AND PAINT

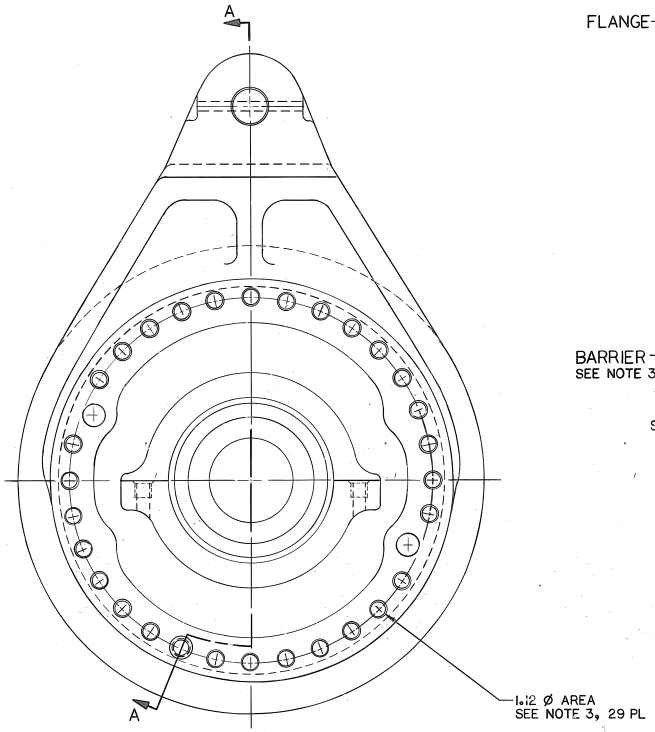

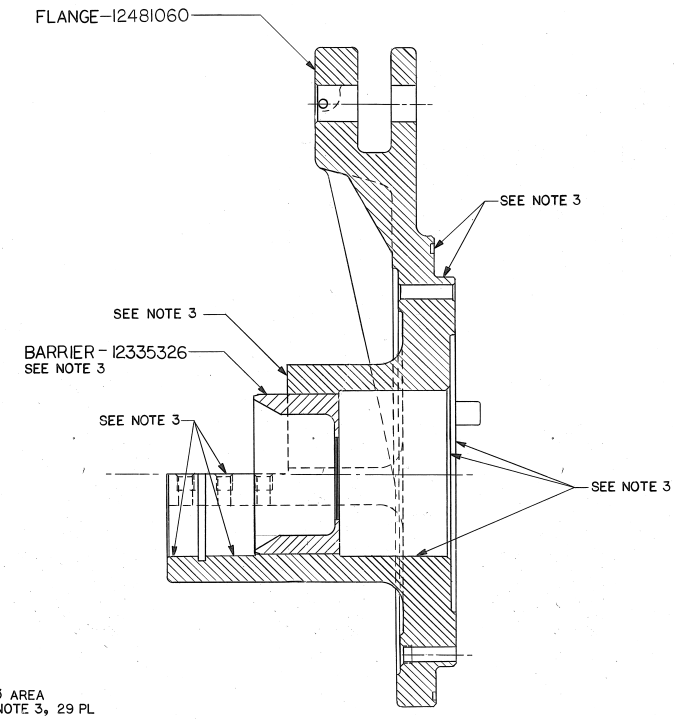

SECTION A-A

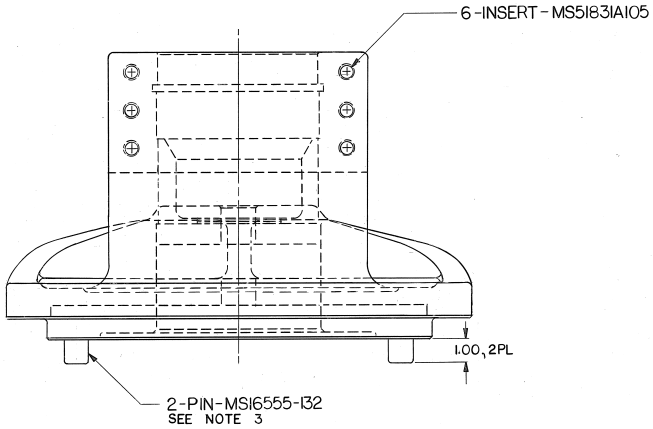

INTERPRET DRAWING IN ACCORDANCE WITH STANDARDS PRESCRIBED BY DOD-STD-100

12325841	M9 ACE		
SEE ENGINEERING RECORDS			
NEXT ASSY	USED ON		
APPLICATION			

UNLESS OTHERWISE SPECIFIED DIMENSIONS ARE IN INCHES
TOLERANCE
2 PLACE DECIMALS ±.03 | 3 PLACE DECIMALS ± — | ANGLES ± —
MATERIAL ———
MATL ENGRG

CONTRACT NUMBER
CONTRACTOR
DRAWN BY PWP | DATE 03-03-24
CHECKER RD | ENGINEER K.MAHMOOD
DRAWING APPROVAL
DESIGN APPROVAL

PART NO. 12481062

U S ARMY TANK AUTOMOTIVE COMMAND
WARREN, MICHIGAN 48090

FLANGE ASSY, ADJUSTING LH

SIZE E | CODE IDENT NO. 19207 | 12481062
SCALE 1/2 | UNIT WT ——— | SHEET ———

12481062