NOTES:

1. MATERIAL: STEEL, CASTING, GRADE 90-60, SPEC ASTM A-148
2. CLEAN AND TREAT TYPE I OR III, IAW TT-C-490
3. CASTING SHALL BE SMOOTH, WELL CLEANED, FREE FROM SHRINKAGE CAVITIES, CRACKS SAND HOLES CHILLS INCLUSIONS AND ANY OTHER DEFECTS DETRIMENTAL TO MACHINABILITY, APPEARANCE OR PERFORMANCE AND SHALL FINISH TO THE SIZE SPECIFIED GATES, RISERS, FINS AND CRACKING STRIPS TO BE REMOVED
4. UNLESS OTHERWISE SPECIFIED: DRAFT ANGLES 3° ROUNDS .25 FILLET RADIUS .50
5. REMOVE ALL BURRS AND SHARP EDGES
6. INSPECT IAW SAE-AMS-STD-2175, CLASS 2, GRADE C.

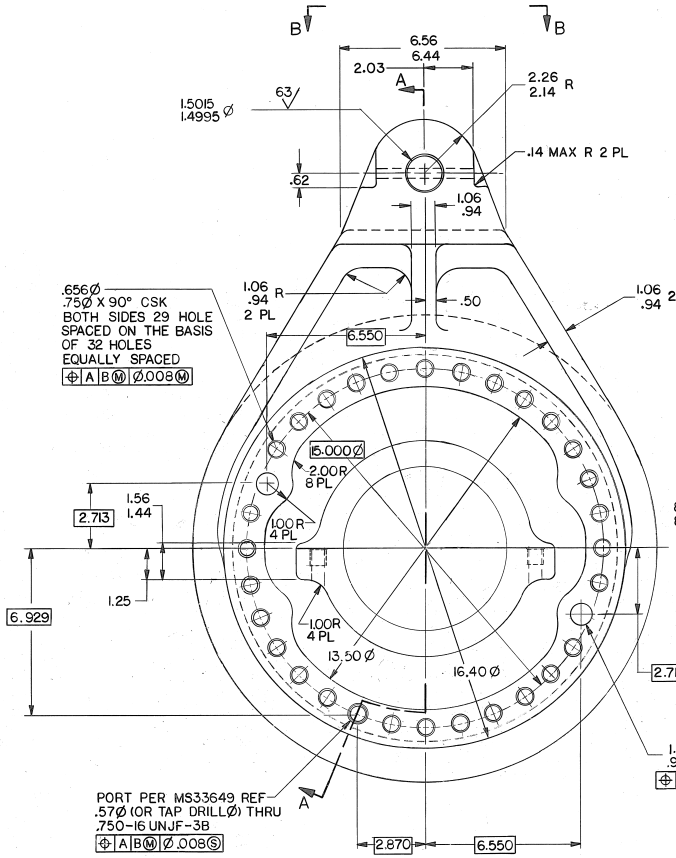

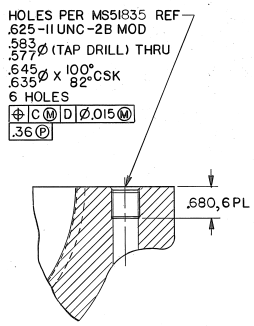

SECTION C-C
SCALE: 1/1

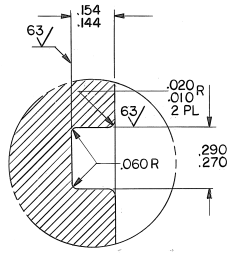

VIEW D
SCALE: NONE

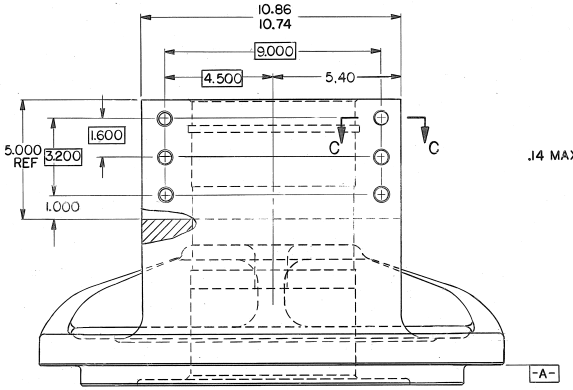

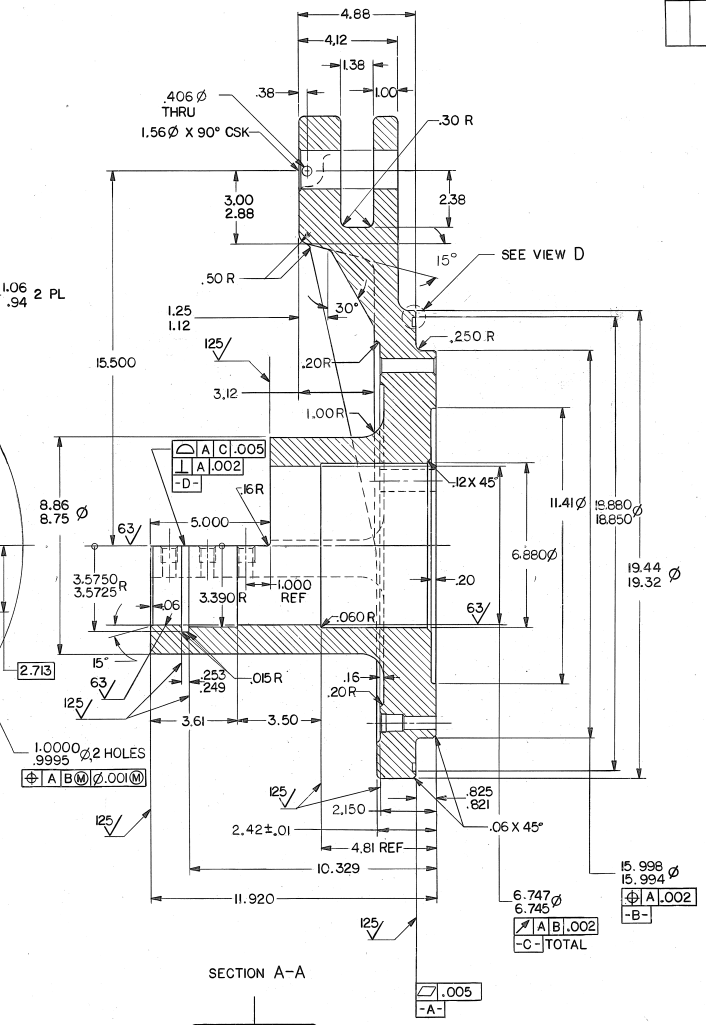

SECTION A-A

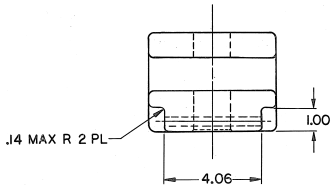

VIEW B-B

REVISIONS					
ZONE	LTR	DESCRIPTION	DATE	APPROVED	
		REPLACES WITH CHANGE DWG 12331948 REV D TAC U-7299	03-03-21	KM	JB

INTERPRET DRAWING IN ACCORDANCE WITH STANDARDS PRESCRIBED BY DOD-STD-100

12481062	M9 ACE	UNLESS OTHERWISE SPECIFIED DIMENSIONS ARE IN INCHES	CONTRACT NUMBER
SEE ENGINEERING RECORDS		TOLERANCE 2 PLACE ±.03 3 PLACE ±.010 ANGLES ±1°	CONTRACTOR
NEXT ASSY	USED ON	MATERIAL SEE NOTE 1	DRAWN BY PWP DATE 03-03-21
APPLICATION		MATL ENGRG	CHECKER RD ENGINEER K.MAHMOOD
			DRAWING APPROVAL
			DESIGN APPROVAL

PART NO. 12481060

U S ARMY TANK AUTOMOTIVE COMMAND
WARREN, MICHIGAN 48090

FLANGE, ADJUSTING, L H

SIZE	CODE IDENT NO.	
E	19207	12481060
SCALE 1/2	UNIT WT	SHEET

12481060