D7962168

SYM	DESCR PT ON	DATE	APPROVAL	
11		1957	TM	LV
A	REDRAWN W/C WAS C SIZE	21463	WM	
B	① ANGULAR TOL ADDED ② ③ 125√ WAS 175√	4-29-63	LK	RS
C	④ PART. NOTE REVISED			
D1	② OPT PART. NOTE REVISED	3-14-64	PAP	
D2	① WAS ±.002 TOL. ② WAS 00000	8-17-65	JPK	TP
E	(1) SQAP NOTE ADDED (2) OPTIONAL NOTE ADDED (3) MIL-STD-100 NOTE ADDED ERR G3415	12-10-75	GAD	
F	(1) WAS 1/32 (2) ADDED OPTIONAL NOTE ERR G3435	6-25-76	GAD	

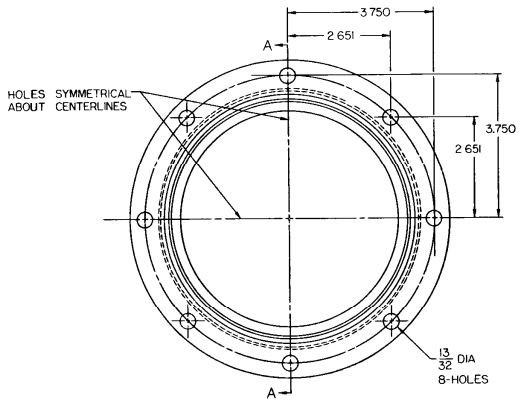

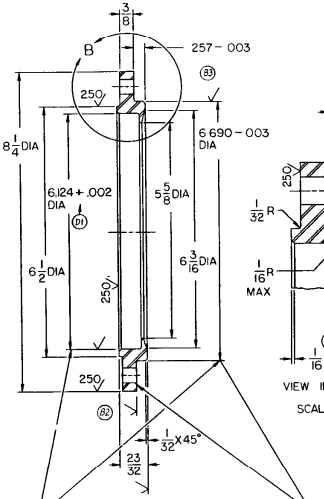

SECTION A-A

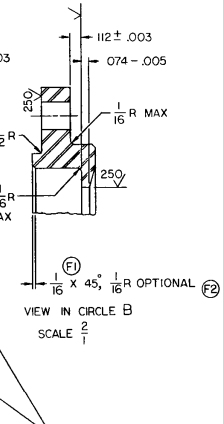

VIEW IN CIRCLE B

SCALE 2/1

NOTES:

1 REMOVE ALL BURRS AND SHARP CORNERS

2 ALL SURFACES MARKED √ TO BE 125√ EXCEPT WHERE NOTED

3 MATERIAL
STEEL CASTING, CLASS 65-35 (E1)
SPEC QQ-S-681

4 OPTIONAL
STEEL FORGING
1025 THRU 1035 (E2)
SPEC MIL-S-13048
WAIVE MECH PROP REQMT
NO MACRO-ETCH TESTS REQUIRED

5 OPTIONAL:
SEAMLESS MECHANICAL TUBING
GRADE 1025-1035
CONDITION OPTIONAL
ASTM A519

6 INTERPRET DRAWING IN ACCORDANCE WITH STANDARDS PRESCRIBED BY MIL-STD-100 (E3)

IN ADDITION TO REQUIREMENTS OF THIS DRAWING, SUPPLEMENTARY QUALITY ASSURANCE PROVISIONS (SQAPS) ARE REQUIRED (SQAP NO SAME AS PART NO)

(B1)

CODE IDENT NO 19207

ORDNANCE PART NO 7962168

K10936282		
K 7962396	MIO94IB/	
SEE ENGINEERING RECORDS		
NEXT ASSY	USED ON	
APPLICATION		
DO	APPLY PART NO	

PHYSICAL PROPERTIES: TP, TS, EL %, RA, BH, RH, IH

UNLESS OTHERWISE SPECIF ED DIMENSIONS ARE IN INCHES TOLERANCES ON FRACTIONS ±1/64 DECIMALS ±.005 ANGLES ±½°

MATERIAL SEE NOTE

HEAT TREATMENT

FINAL PROTECTIVE FINISH

ORIGINAL DATE OF DRAWING JAN 27 1951

DRAFTSMAN G.A. CHECKER G.A.

ENGINEER R.C. CHIEF ENGR R.C.

PROJ ENGR A.R. SUPV ENGR R.E.

SUBMITTED L. SMITH

APPROVED BY ORDER OF THE CHIEF OF ORDNANCE

COL. H. PARSONS

CAP BEARING, FINAL DRIVE OUTPUT SHAFT

SCALE 1/1 UNIT WT 3.09 LBS

ORDNANCE CORPS
DEPT OF THE ARMY
DETROIT ARSENAL

SIZE D CODE IDENT NO 19207 7962168

SHEET — OF —