REVISIONS			
LTR	DESCRIPTION	DATE	APPROVED
A	WAS NO. 10936276		
B	NOTE REMOVED		
C	NOTE ADDED		
D	REV FINISH NOTE		

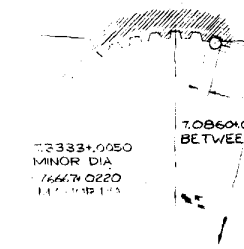

INTERNAL INVOLUTE SPLINE DATA
CONFORMS TO ASA B5.15-1960

STYLE	FLAT ROOT
TYPE OF FIT	SIDE
NUMBER OF TEETH	45
DIAMETRAL PITCH	6/12
PRESSURE ANGLE	30°
PITCH DIAMETER (REF)	7.500
BASE CIRCLE DIA (REF)	6.4952
TRUE INVOLUTE FORM DIAMETER (MIN)	7.6443
CIRCULAR SPACE WIDTH	
MINIMUM EFFECTIVE	.2618
MAXIMUM EFFECTIVE (REF)	.2636
MINIMUM ACTUAL (REF)	.2642
MAXIMUM ACTUAL	[illegible]
INVOLUTE PROFILE ERROR (REF)	.0008
(ZERO AT PITCH POINT)	.0007
MAXIMUM CUMULATIVE PITCH ERROR (ANY TWO TEETH)	.0024 (REF)
MAXIMUM PARALLELISM ERROR (REF)	.0004
LENGTH OF ENGAGEMENT (REF)	$1\frac{3}{8}$

MATES WITH PART NO. 10936276

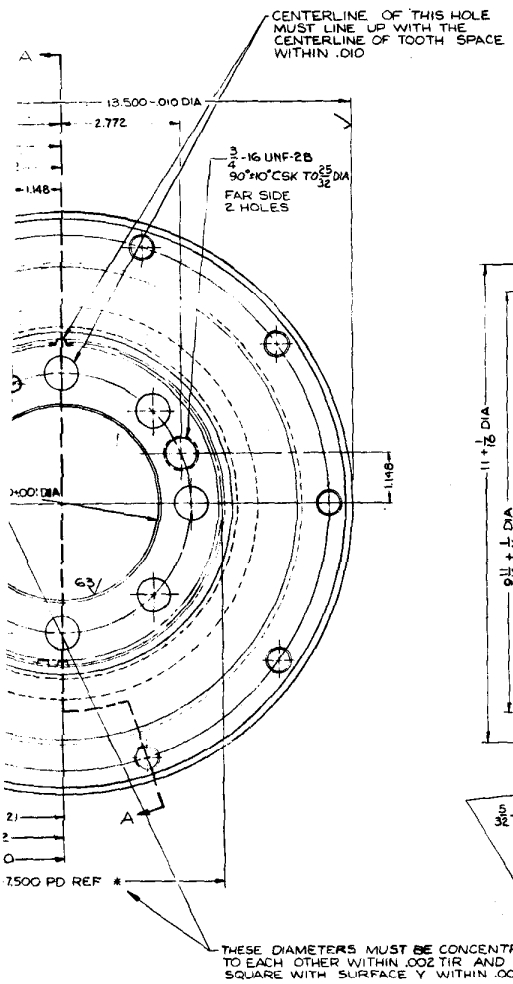

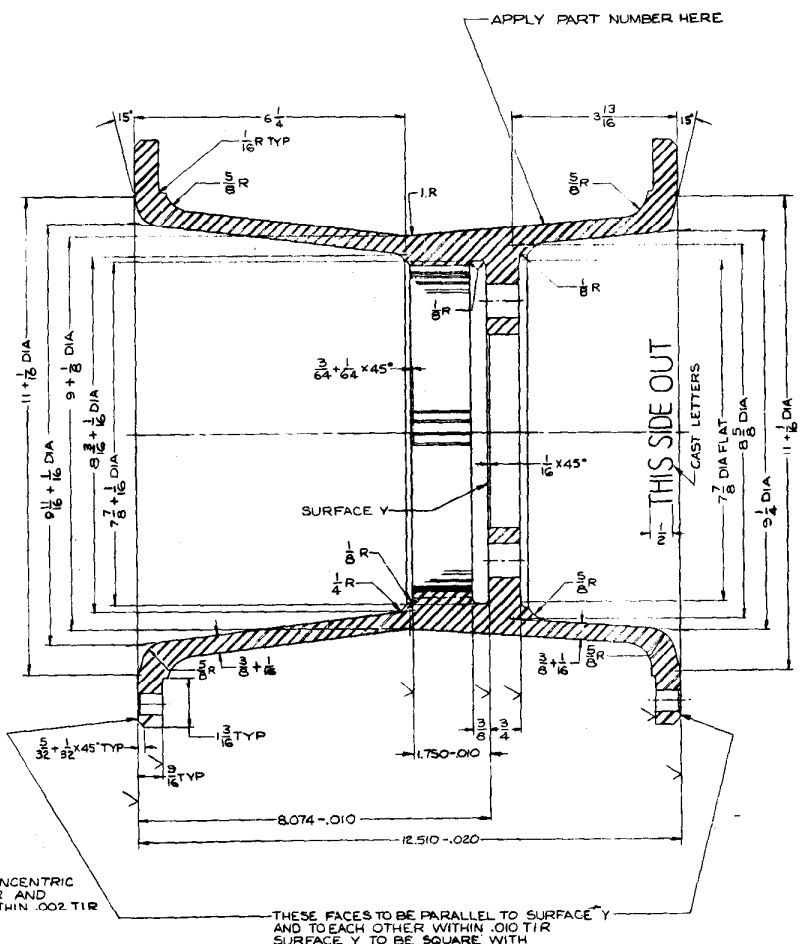

SECTION A-A

10936277

CASTING TOLERANCE	
DIMENSIONS	TOLERANCE
0 - 3.0	±1/32
3.1 - 7.0	±3/64
7.1 - 20.0	±1/16

CRITICAL APPLICATION COMPONENT ©

CODE IDENT. NO. 00000
ORDNANCE PART NO. 10936277

K 10936277 MAP-N103	PHYSICAL PROPERTIES	DIMENSIONS ARE IN INCHES TOLERANCES ON FRACTIONS ±1/64 ANGLES ±2° DECIMALS ±.005	
SEE ENGINEERING RECORDS		MATERIAL SEE NOTE	
HEAT TREATMENT		HEAT TREATMENT	
APPLICATION		FINAL PROTECTIVE FINISH SEE NOTE	

HUB, SPROCKET, FINAL DRIVE

ORDNANCE CORPS
DEPT OF THE ARMY
DETROIT ARSENAL

K 10936277

SCALE 1/1

K-10936277 F2/2

-7-2-1

7.3333+.0050
MINOR DIA
7.6667+.0220
MAJOR DIA

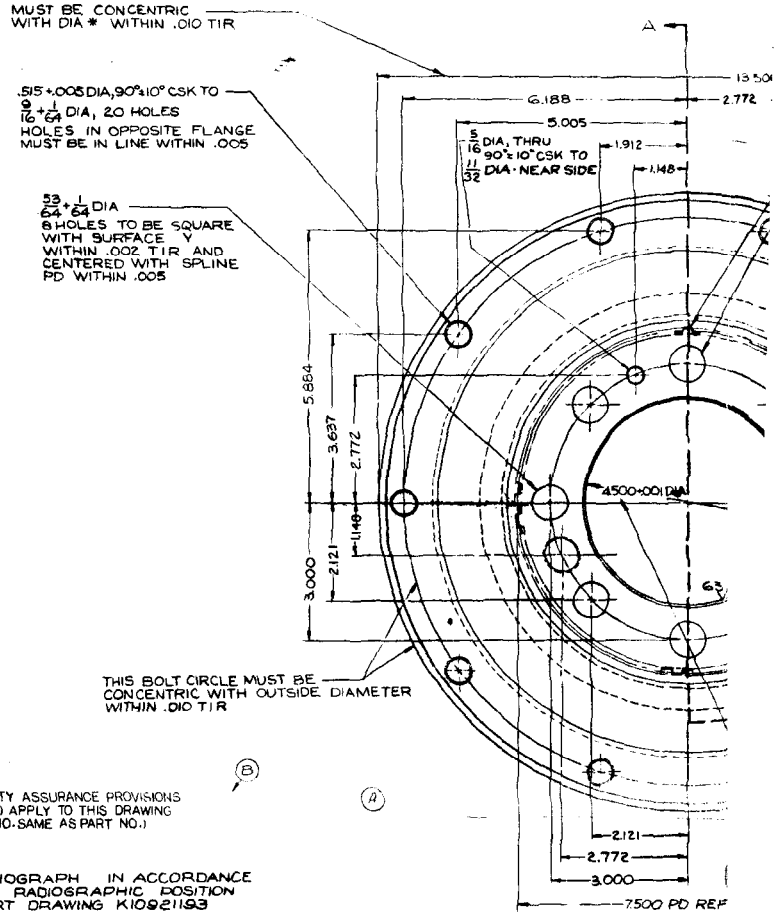

QUALITY ASSURANCE PROVISIONS (QAPS) APPLY TO THIS DRAWING (QAP NO. SAME AS PART NO.)

RADIOGRAPH IN ACCORDANCE WITH RADIOGRAPHIC POSITION CHART DRAWING K10921193

MUST BE FREE OF BURRS AND SHARP EDGES

SURFACES MARKED √ TO HAVE 125 √

ALL CAST DIAMETERS MUST BE CONCENTRIC TO SPLINE PD WITHIN .094 TIR

ALL HOLES AND MACHINED SURFACES MUST BE FREE FROM PRIME AND TOPCOAT

FINISH PER DRAWING 12369003

MATERIAL NOTE
STEEL CASTING
CLASS 150-125
SPEC QQ-S-681
EXCEPT SPLINE HARDNESS TO BE 302 MIN B.H.N.
ALL OTHER AREAS TO BE 363 MAX B.H.N.

K-10936277 F1/2