K

REVISIONS			
SYM	DESCRIPTION	DATE	APPROVED
A	(1) WAS 3.6188 MIN (2) WAS 7.988 MIN (3) ADDED RECALCULATED DIM. & DESCRIPTIONS (4) ADDED SNAP NOTE (5) WAS MIL-STD-8 (6) ADDED 4150 H (7) ADDED IDENT NOTE (8) WAS .1940 (9) WAS .0008 (10) ADDED (11) WAS .0005 (12) ADDED (13) ADDED ERR G 3435	6-25-76	
B	ADDED NOTE ERR BRI-H7419	5-15-81	
C	(1) DELE (2) REV (3) WAS MIL-M-11472 (4) WAS MIL-S-13048 (B) BRI M3267	7-21-86	
D	NOR BRI-U0365	99-10-14	ED
E	NOR BRI-U4355		ED

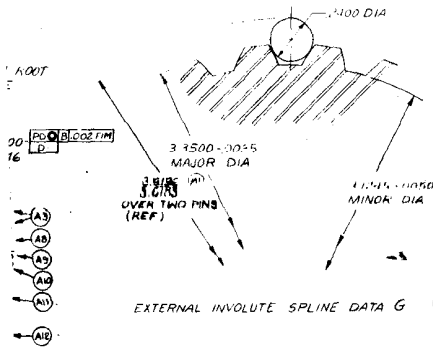

EXTERNAL INVOLUTE SPLINE DATA G

EXTERNAL INVOLUTE SPLINE DATA H
PER ASA B5.15 1960

STYLE	FLAT ROOT
TYPE OF FIT	SIDE-CLOSE
NUMBER OF TEETH	45
DIAMETRAL PITCH	6/12
PRESSURE ANGLE	30°
PITCH DIA (REF)	7.500
BASE CIRCLE DIA (REF)	6.4936
TRUE INVOLUTE FORM DIA (MAX)	1.3183
CIRCULAR TOOTH THICKNESS	
MAX EFFECTIVE	.2618
MIN EFFECTIVE (REF)	.2600
MAX ACTUAL (REF)	.2594
MIN ACTUAL	.2576
INVOLUTE PROFILE ERROR	+.0005
(ZERO AT PITCH POINT)	-.0007
(A13) TOTAL INDEX ERROR (MAX)	.0023
MAX PARALLELISM ERROR	.0005
LENGTH OF ENGAGEMENT	1 3/8
MATES WITH PART NUMBER 10936277	

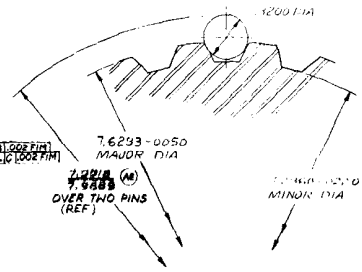

EXTERNAL INVOLUTE SPLINE DATA H

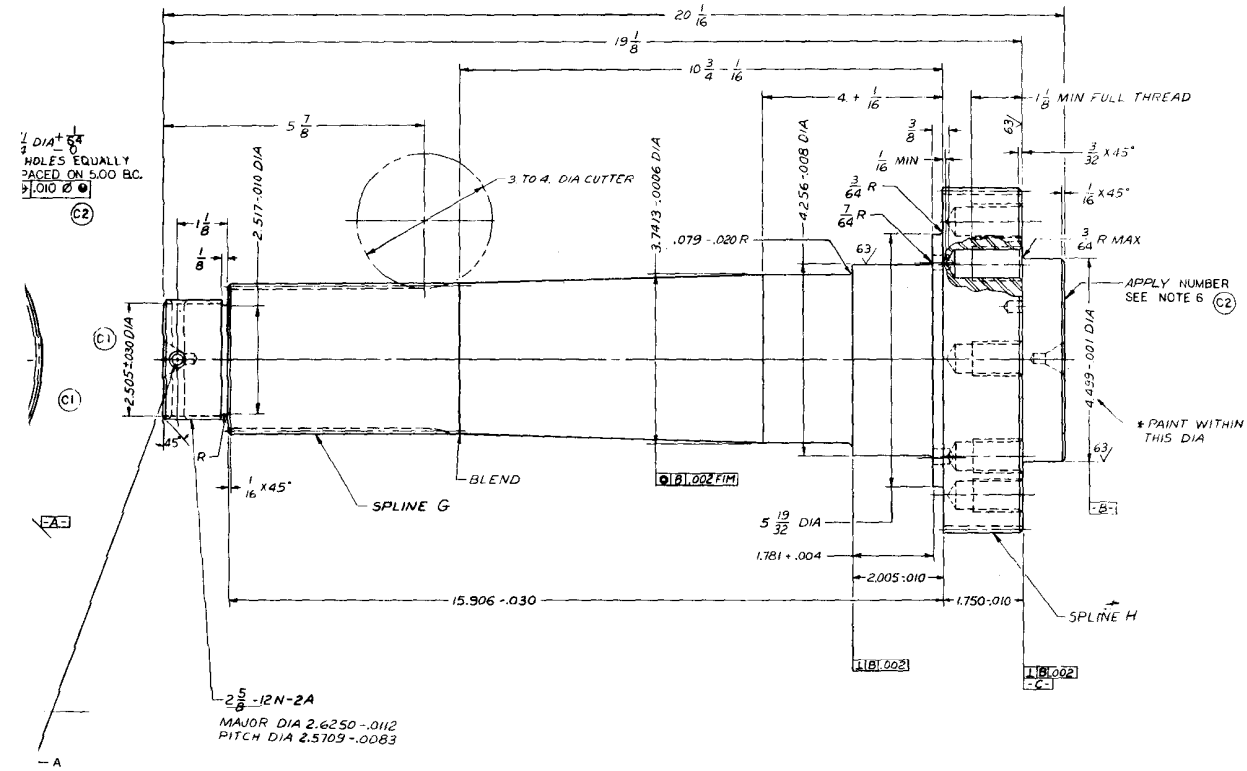

10936276

PART NO.	HOLE 'A'
10936276	Ø .281 +.010
10936276-1	Ø .297 +.010

(B)

CURRENT DESIGN ACTIVITY (A7)
(C2) FSCM NO. 19207

CODE IDENT. NO. 00000 SEE TABULATION
ORDNANCE PART NO. [redacted]

DISTRIBUTION STATEMENT A.
APPROVED FOR PUBLIC RELEASE;
DISTRIBUTION IS UNLIMITED.

PMIC A	
12463162	M992A2 M109A6 M109A2A6
SEE ENGINEERING RECORDS	
NEXT ASSY	USED ON
APPLICATION	
APPLY PART NO. AS SPECIFIED	

PHYSICAL PROPERTIES
UNLESS OTHERWISE SPECIFIED DIMENSIONS ARE IN INCHES TOLERANCES ON FRACTIONS ±1/64 DECIMALS ±.005 ANGLES ±2°
MATERIAL SEE NOTE
HEAT TREATMENT SEE NOTE
FINAL PROTECTIVE FINISH SEE NOTE

SHAFT, FINAL DRIVE

ORDNANCE CORPS
DEPT OF THE ARMY
DETROIT ARSENAL

SIZE K 10936276
SCALE 1/1 UNIT WT 11.5 LB
V.E.A.

F2/2 K10936276

B+G+I+I

EXTERNAL INVOLUTE SPLINE DATA G

STYLE	FLAT ROOT
TYPE OF FIT	SIDE
NUMBER OF TEETH	26
DIAMETRAL PITCH	8/16
PRESSURE ANGLE	30°
PITCH DIA (REF)	3.2500 PD Ⓢ Ⓛ .002 TIM Ⓓ -
BASE CIRCLE DIA (REF)	2.8146
TRUE INVOLUTE FORM DIA (MAX)	3.144
EFFECTIVE TOOTH THICKNESS	
MAX EFFECTIVE	.1965
MIN EFFECTIVE (REF)	.1959 (A3)
MAX ACTUAL (REF)	.1943 (A8)
MIN ACTUAL	.1937
INVOLUTE PROFILE ERROR (ZERO AT PITCH POINT)	.0005 (A9)
	-.0007 (A10)
MAX PARALLELISM ERROR	.0007 (A11)
LENGTH OF ENGAGEMENT	4 1/8
MATES WITH PART NUMBER 10898041	
MAX INDEX ERROR	.0019 (A12)

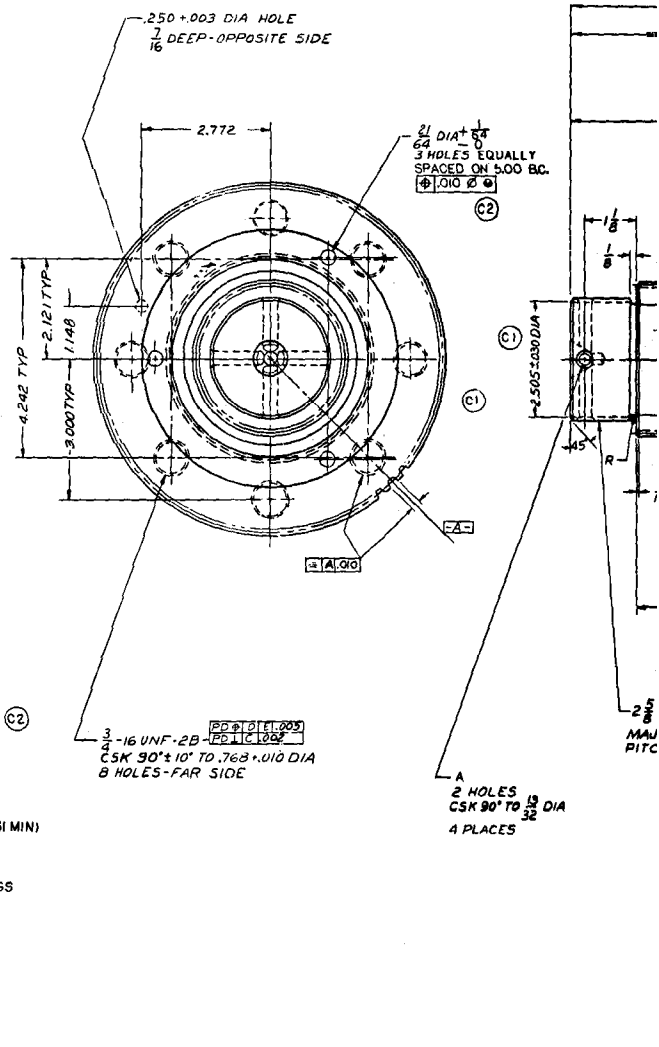

NOTES:

1. QUALITY ASSURANCE PROVISIONS (QAP) 10936276 APPLY TO THIS ITEM. ~~IN ADDITION TO REQUIREMENTS OF THIS DRAWING, SUPPLEMENTARY QUALITY ASSURANCE REQUIREMENTS (QAPS) ARE REQUIRED. (QAP NO. SAME AS PART NO.)~~ (A4)

2. MAY BE MADE FROM FORGING PART NO. 10925486

3. SURFACE INDICATED * SHALL BE PAINTED

4. FINISH: IN ACCORDANCE WITH DRAWING 12369003.

5. HEAT TREATMENT
QUENCH AND TEMPER TO 363-415 BRINELL
THREADS ONLY MAY BE SOFT (BRINELL 261 MIN)
INSPECT 100% PER ASTM E1444
NO CRACKS PERMISSIBLE.

6. ITEM IDENTIFICATION:
METAL STAMP THE FOLLOWING MARKINGS IN ACCORDANCE WITH MIL-STD-130 IN .13 ± .02 HIGH CHARACTERS
19207-(SEE TABLE)
MFR - [ ]
MANUFACTURER'S CAGE CODE

7. MUST BE FREE OF BURRS AND SHARP EDGES

8. 125√ FINISH ALL OVER EXCEPT AS NOTED

9. MATERIAL
STEEL FORGING
COMPOSITION 4340H, 9850H, 4150H (A6)
CONDITION NORMALIZED (C4)
SPEC MIL-S-46172
WAIVE MECHANICAL PROPERTIES OF SPECIFICATION

10. INTERPRET DRAWING IN ACCORDANCE WITH STANDARDS PRESCRIBED BY DOD-STD-100 (A5)

10936276	FR 1	REV E

F 1/2 K10936276