1 Feb. 60

NOTICE: WHEN GOVERNMENT DRAWINGS, SPECIFICATIONS, OR OTHER DATA ARE USED FOR ANY PURPOSE OTHER THAN IN CONNECTION WITH A DEFINITELY RELATED GOVERNMENT PROCUREMENT OPERATION, THE UNITED STATES GOVERNMENT THEREBY INCURS NO RESPONSIBILITY, NOR ANY OBLIGATION WHATSOEVER; AND THE FACT THAT THE GOVERNMENT MAY HAVE FORMULATED, FURNISHED, OR IN ANY WAY SUPPLIED THE SAID DRAWINGS, SPECIFICATIONS, OR OTHER DATA IS NOT TO BE REGARDED BY IMPLICATION OR OTHERWISE AS IN ANY MANNER LICENSING THE HOLDER OR ANY OTHER PERSON OR CORPORATION, OR CONVEYING ANY RIGHTS OR PERMISSION TO MANUFACTURE, USE, OR SELL ANY PATENTED INVENTION THAT MAY IN ANY WAY BE RELATED THERETO.

PART NO.	DIMENSION "A"	NEXT ASSY	USED ON
10898039	.281 +/- .015	10936282	M109/A1/A1B
10898039-1	.291 +/- .010	12463163	M109A2-A5/A6;M992A2
		12463162	M109A2-A5/A6;M992A2

REVISIONS

SYM	DESCRIPTION	DATE	APPROVAL
A	WAS 897	2-13-63	JEP
B	ADDED NOTE ERR BRI-H7413	5-15-81	CJA
C	1) ADDED NOTE 2) DELETED DIM. 3) REVISED VIEW ERR BRI-H6462	7-21-82	CJA
D	NOR BRI-U4355	020320	ED

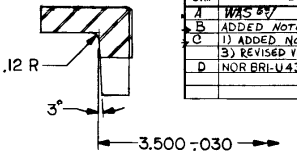

SECTION A-A

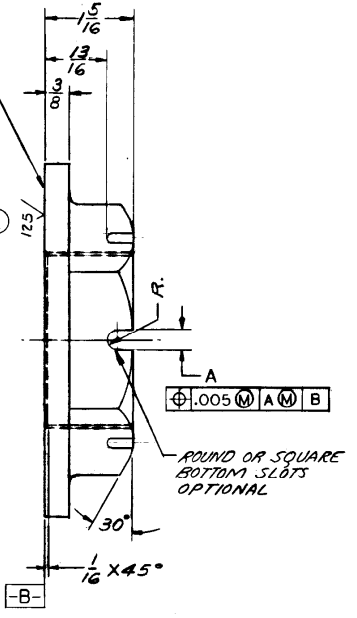

THIS FACE TO BE SQUARE WITH AXIS OF THREAD WITHIN .005 T.I.R. AND MUST BE FLAT TO CONCAVE.

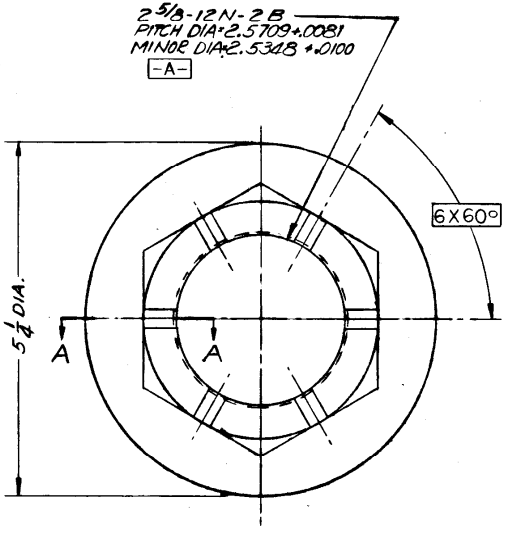

QUALITY ASSURANCE PROVISIONS (QAP) 10898039 APPLY TO THIS ITEM.

APPLY PART NUMBER PER MIL-STD-130

MUST BE FREE OF BURRS AND SHARP EDGES

MATERIAL NOTE:
STEEL FORGING
8640, 8740 OR 4140
SPEC. MIL-S-46172
WAIVE MECHANICAL PROPERTIES FOR FORGING AS SHOWN IN SPEC.

DISTRIBUTION STATEMENT A.
APPROVED FOR PUBLIC RELEASE;
DISTRIBUTION IS UNLIMITED.

CRITICAL APPLICATION COMPONENT

ORDNANCE PART NO. [redacted] SEE TABULATION

PMIC A		PHYSICAL PROPERTIES		UNLESS OTHERWISE SPECIFIED	ORIGINAL DATE OF DRAWING JAN. 10, 1957	NUT, SPROCKET SHAFT, FINAL DRIVE	ORDNANCE CORPS DEPT OF THE ARMY DETROIT ARSENAL
SEE TABLE		YP		DIMENSIONS ARE IN INCHES TOLERANCES ON FRACTIONS ±1/64 DECIMALS ±.0 ANGLES ±2°	DRAWN BY J.H.S. CHECKER		
SEE ENGINEERING RECORDS		TS			TRACER CHECKER		DWG SIZE C 10898039
		EL 2		MATERIAL SEE NOTE	ENGR. R.C. ENGR. R.C.		SHEET 1 OF 1
NEXT ASSY	USED ON	RA		HEAT TREATMENT QUENCH & TEMPER	SUBMITTED		
APPLICATION		BH		FINAL PROTECTIVE FINISH	ORD CORPS APPROVED BY ORDER OF THE CHIEF OF ORDNANCE		
DO	APPLY PART NO. AS SPECIFIED	RH	C 26 C 36		ORD CORPS	SCALE 1/1	UNIT WT 3.0 LBS.

V.E.A. CLEVELAND ORDNANCE PLANT CADILLAC MOTOR CAR DIV. G.M.C.

DO 931G REF 86299593 CTL-275 GO 452434 C 10898039 E.O. 74454 (N)34127

ER 11-21-61