K10898035

A	⑦③④ ADDED ⑥ NOTES ADDED	6-8-61	
B	WAS 6 HOLES	8-8-61	
C	REVISED NOTES	6-16-62	
D	REMOVED VARNISH NOTE		
	REVISED PAINT NOTES	8-20-62	
E	NOTE REVISED	11-19-65	
F	KIREV FINISH NOTE BRI-S1448	00088	MK
G	NOR BRI-U4355	02-03-20	ED

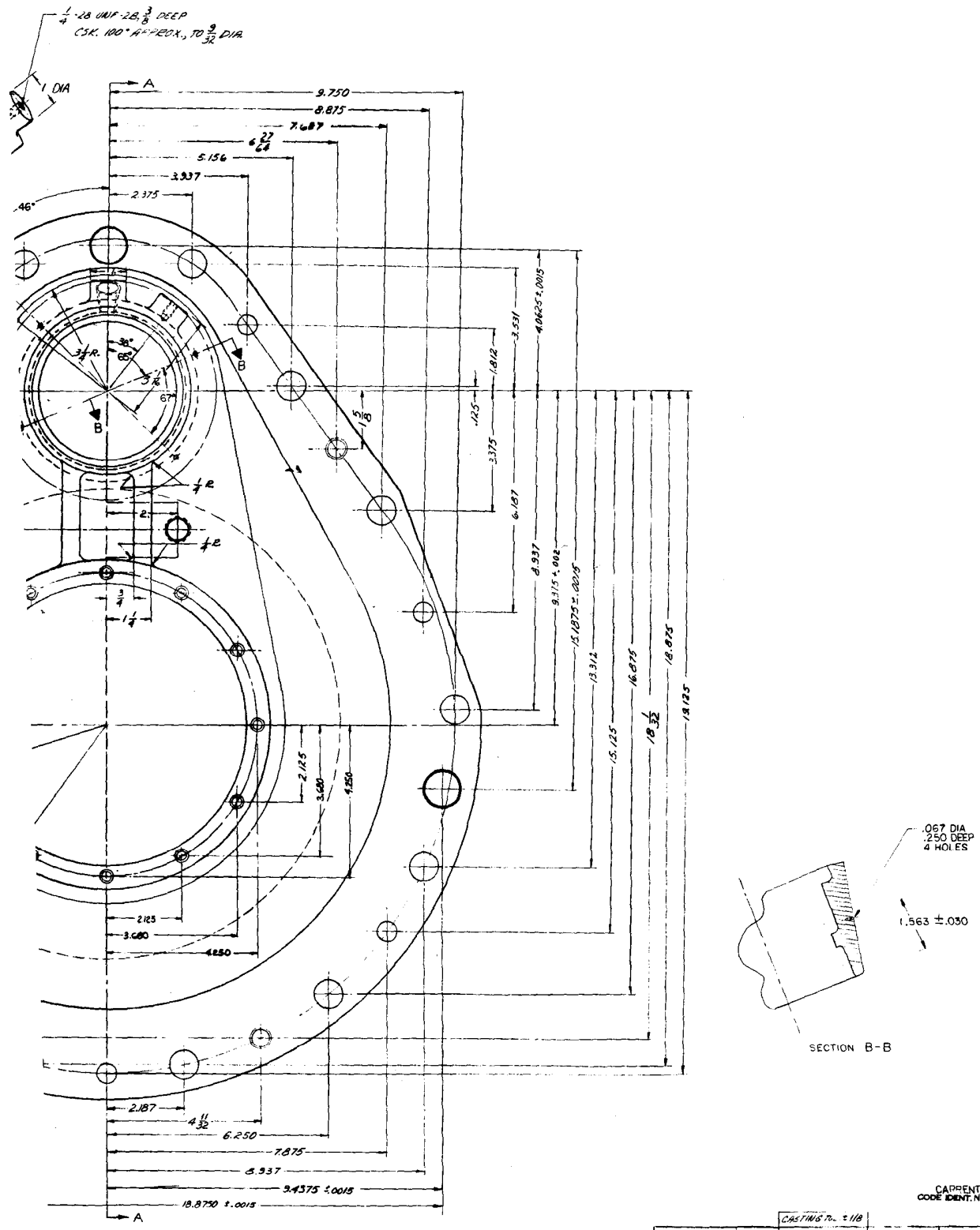

CARPENT DESIGN ACTIVITY 19207
CODE IDENT. NO. 00000

10898035

K10903132	CASTING TOL. ±1/8		COVER, FINAL DRIVE	ORDNANCE CORPS DEPT OF THE ARMY DETROIT ARSENAL
	±1/64 ±.005 ±2° SEE NOTE			K 10898035
	SEE NOTE	1/1	61.50 LBS.	SHEET 1 OF 1

(B) 71956 (C) 90598 (D) 93007 (E) 14888

F 4/4 K10898035

D.D. 9316

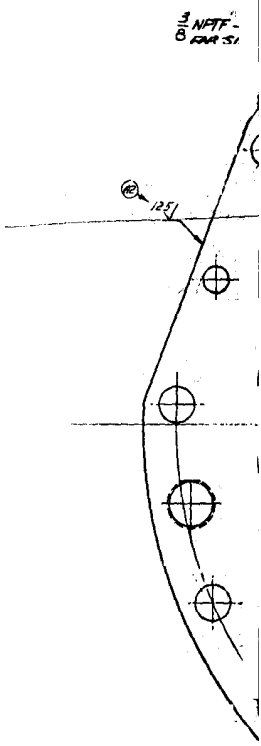

QUALITY ASSURANCE PROVISIONS
(QAP) 10898035 APPLY TO THIS ITEM.

APPLY PART NUMBER
PER MIL-STD-130

FINISH SURFACES MARKED "X"
PER DRAWING 12369003
FINISH SURFACES MARKED "Z"
PER DRAWING 12369004

D2

A5

ALL MACHINED SURFACES
AND TAPPED HOLES SHALL BE
FREE FROM PRIME AND TOPCOAT

C

RADIOGRAPH IN ACCORDANCE
WITH RADIOGRAPHIC POSITION
CHART DRAWING 10918611

D1

DIAMETERS MARKED * MUST BE CONCENTRIC, PARALLEL AND
SQUARE TO EACH OTHER AND TO SURFACES MARKED "Y"
AND "W" AS APPLICABLE WITHIN .002 T.I.R.

ALL DRAFT ANGLES TO BE 2°

ALL CORNER AND FILLET RADII 1/8
UNLESS OTHERWISE SPECIFIED

MATERIAL NOTE
STEEL CASTING
CLASS 90-60
ASTM A148/A148M

A6

CTL 275

F 1/4 K10898035

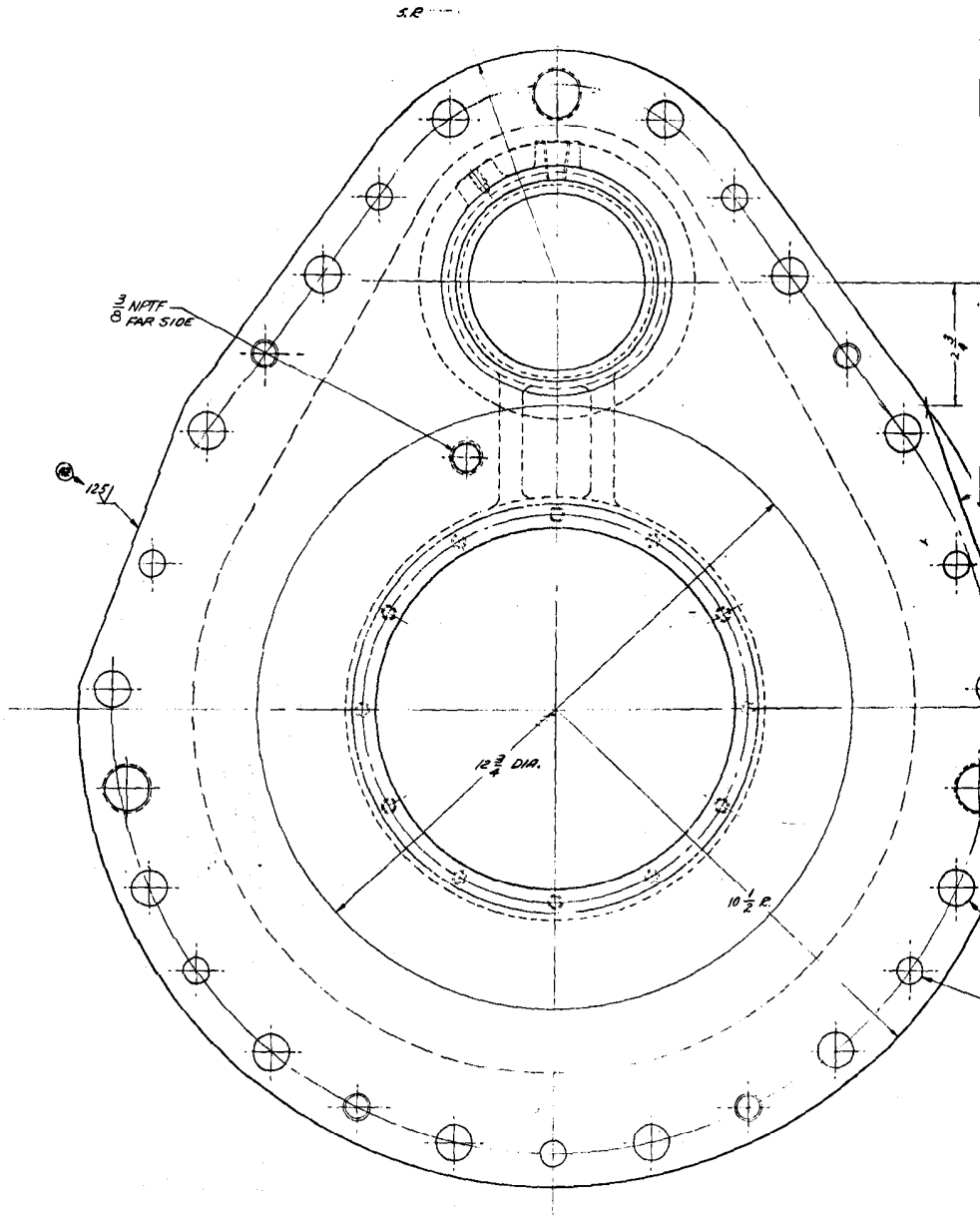

QUALITY ASSURANCE PROVISIONS
(QAP) 10898035 APPLY TO THIS ITEM.

APPLY PART NUMBER
PER MIL-STD-130

FINISH SURFACES MARKED "X"
PER DRAWING 12369003
FINISH SURFACES MARKED "Z"
PER DRAWING 12369004

(T.)

ALL MACHINED SURFACES
AND TAPPED HOLES SHALL BE
FREE FROM PRIME AND TOPCOAT

RADIOGRAPH IN ACCORDANCE
WITH RADIOGRAPHIC POSITION
CHART DRAWING 10918611

DIAMETERS MARKED * MUST BE CONCENTRIC, PARALLEL AND
SQUARE TO EACH OTHER AND TO SURFACES MARKED "Y"
AND "W" AS APPLICABLE WITHIN .002 T.I.R.

ALL DRAFT ANGLES TO BE 2°

ALL CORNER AND FILLET RADII 1/8
UNLESS OTHERWISE SPECIFIED

MATERIAL NOTE
STEEL CASTING
CLASS 90-60
ASTM A148/A148M

F 2/4 K10898035

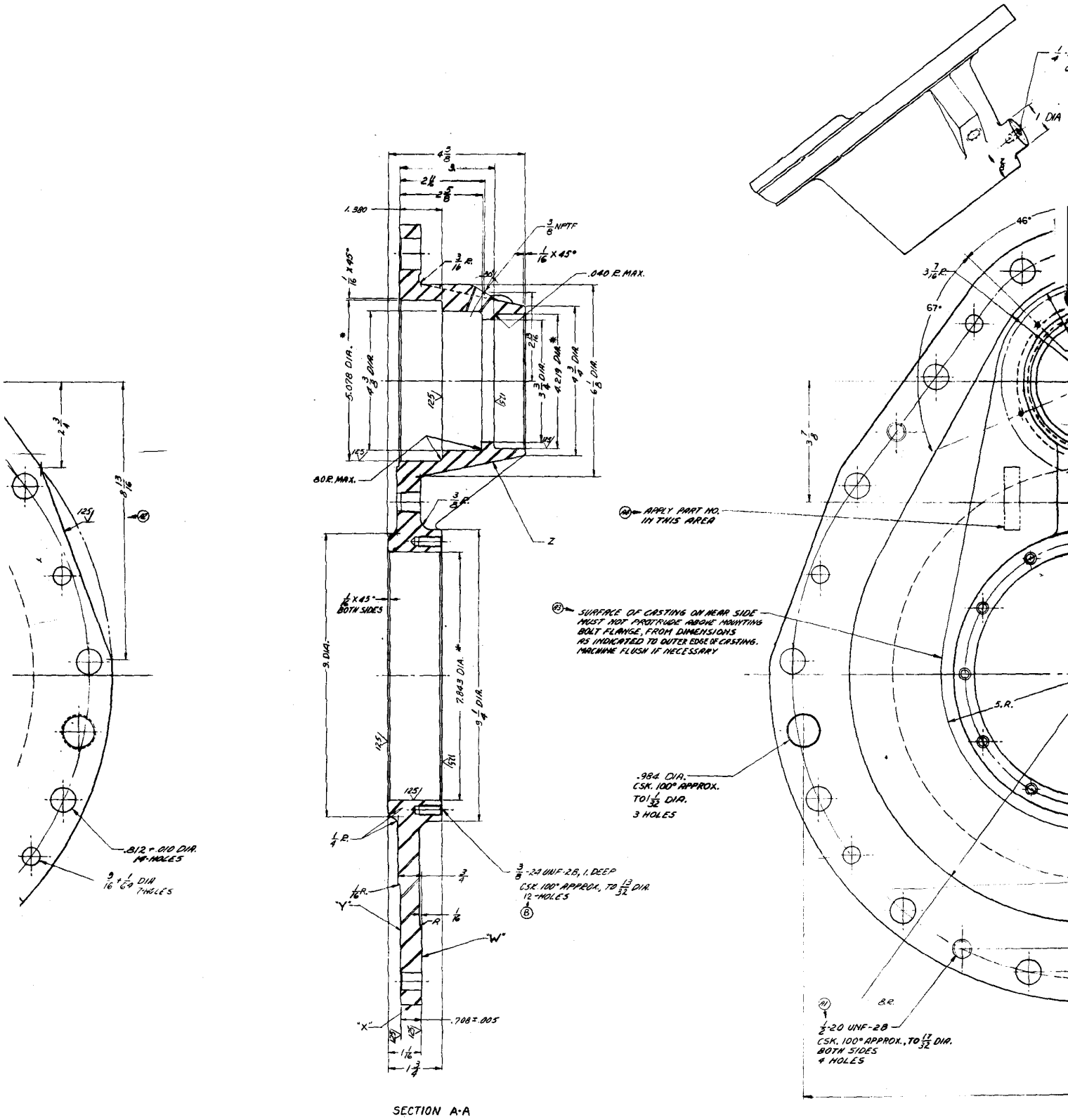

SECTION A-A

F3/4 K10898035