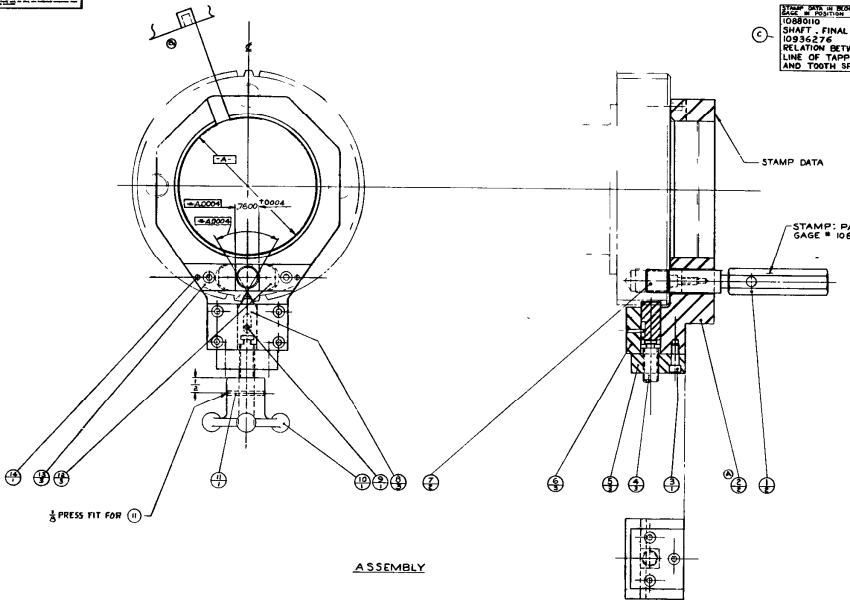

ASSEMBLY

(14)	DOWEL	2	1/8 x 3/4
(13)	LOCATOR	1	1/8 x 3/4
(12)	LOCATOR	1	1/8 x 3/4
(11)	DOWEL	1	1/8 x 3/4
(10)	HAND KNOB	1	1/2-13 UNC x 2
(9)	DOWEL	1	1/8 x 3/4
(8)	LOCATOR	1	1/8 x 3/4
(7)	PLUG	1	1/8 x 3/4
(6)	CLAMP	1	3/8 x 1 1/4
(5)	CLAMP	1	3/8 x 1 1/4
(4)	ROD	1	3/8 x 2 1/2
(3)	SCREW	2	1/4-20 x 3/4
(2)	BODY	1	3/8 x 4 x 5
(1)	HANDLE	1	3/8 x
ITEM	DESCRIPTION	QUANTITY	SIZE

A		APPLICATION WAS 10881195	
		SLOT ADDED IN VIEW "A"	
		CHANGE ON SHEETS 1 & 2 ONLY	7 JAN 60
B		CENTER REF. ON RIGHT SIDE OF A	
		SQUARED REF. COMP 10936274	
		CHANGE ON SHEETS 1 & 2 ONLY	18 OCT 59
C		CAPS SYMBOLS WAS 10929484	
		REF. COMP. WAS 10929572	4 DEC 59
D		REMOVED "TYPE" & ADDED THE PARTS FOR (14)	14 DEC 59

STAMP DATA IN BLOCK BELOW ON GAGE IN POSITION SHOWN
10880110
SHAFT, FINAL DRIVE
10936276
RELATION BETWEEN CENTER LINE OF TAPPED HOLE AND TOOTH SPACE

REF COMPONENT
MCD 10936277

MFR. NO.	10936276		
MFR. CODE			
MATL. SPECIFICATION			
SECTION			
APPLICATION			
PHYSICAL CONDITION			
UNLESS OTHERWISE SPECIFIED DIMENSIONS ARE IN INCHES			
2 PLCS ± .010	.5		
AS NOTED			
FINISH			
PROTECTIVE FINISH			
MATERIAL			
FINISH			
PROTECTIVE FINISH			
DRAWN			
TRACED			
CHECKED			
ENGINEER			
APPROVED			
MATERIAL			
FINISH			
PROTECTIVE FINISH			
DATE	24 FEB 60		
DRAWN			
TRACED			
CHECKED			
ENGINEER			
APPROVED			

FIXTURE GAGE

ORDNANCE CORPS
SHAFT OF THE ARMY
Detroit

APPLICABLE SPECIFICATIONS
MIL-D-10944, MIL-D-70827

SIZE F
10880110
SCALE 1/1
SHEET 1 OF 2