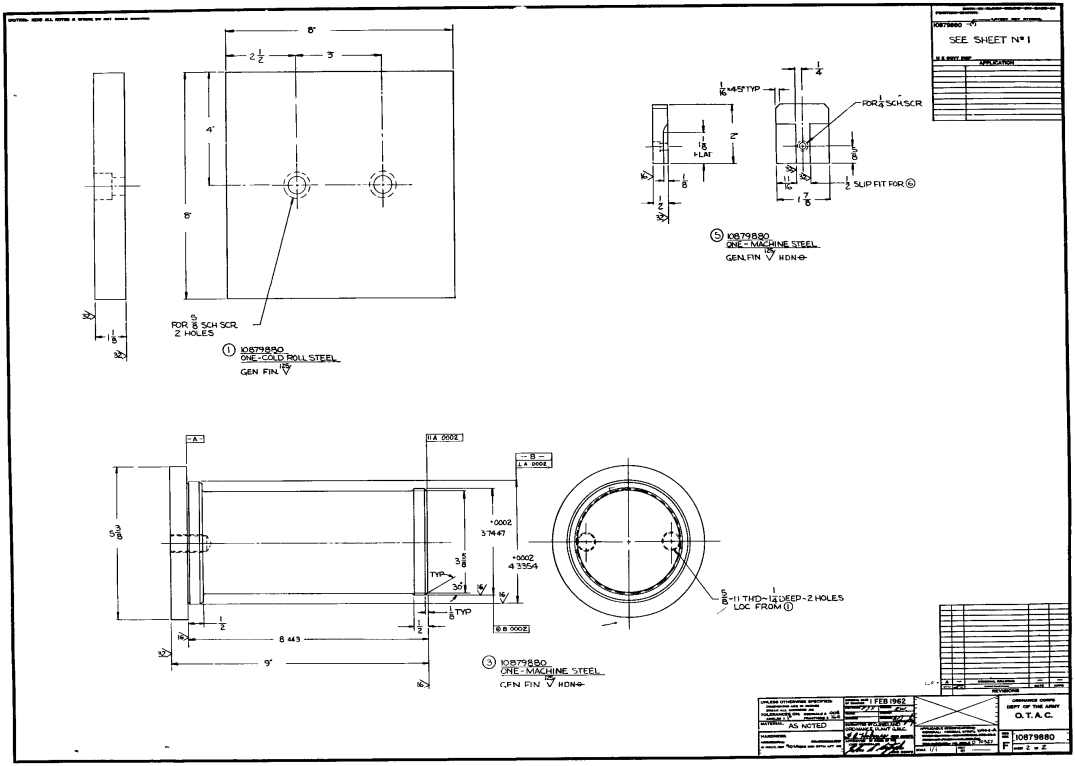

SEE SHEET Nº 1
APPLICATION
8"
2 1/2
3"
4"
8"
FOR 5/8 SCH SCR 2 HOLES
1 1/8
① 10879880 ONE-COLD ROLL STEEL GEN FIN 125/√
1/16 x 45° TYP
1/4
FOR 1/4 SCH SCR
2"
1 1/8 FLAT
5/8
1/8
11/16
1/2 SLIP FIT FOR ⑥
1/2
1 7/8
⑤ 10879880 ONE-MACHINE STEEL GEN FIN 125/√ HDN
-A-
11.A .0002
-B-
1.A .0002
5 3/8
+.0002 3.7447
3 5/8
+.0002 4.3354
TYP
30°
1/8 TYP
⊕ B .0002
1/2
8.443
9"
5/8-11 THD-1 1/4 DEEP-2 HOLES LOC FROM ①
③ 10879880 ONE-MACHINE STEEL GEN FIN 125/√ HDN
REVISIONS
UNLESS OTHERWISE SPECIFIED
MATERIAL AS NOTED
FEB 1962
ORDNANCE CORPS DEPT OF THE ARMY O.T.A.C.
10879880
F
SHEET 2 OF 2
13234-20