CAUTION: READ ALL NOTES & GENERAL DO NOT SCALE DRAWING

10879880 -01

SEE ASS'Y VIEW

U.S. ARMY ARSC

APPLICATION
DATA FOR PLANT FABRICATION

(C)

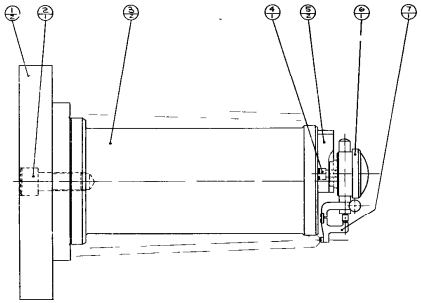

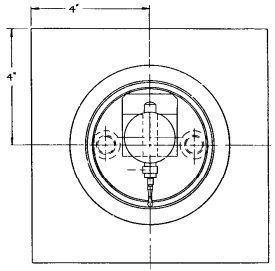

ASSEMBLY

STOCK ON HAND PLANT SUPPLIES
ATTACHED ALL DATA IN BLOCK BELOW

10879880
SPACER
10898042
PARALLELISM & SQUARENESS

OPERATING INSTRUCTIONS

1 LOAD COMPONENT ON PLUG
2 SET INDICATOR TO ZERO FROM COMPONENT
3 CHECK ALL AROUND TOP SURFACE OF COMPONENT TOTAL INDICATOR READING NOT TO EXCEED .003

PAINT ONE COAT OF GRAY OR I OLIVE DRAB & TWO COATS OF SHELLAC ON ALL SURFACES EXCEPT GAGING SURFACES

(B)

SET	DESCRIPTION	QTY	MAT	SIZE
7	SET ANGLE ATTACH	1	STD	FEDERAL AS SH REF
6	DIAL INDICATOR	1	STD	MFG GROUP # 1 HEAVY WEIGHT BACK, BOTTOM, SIDE, TOP, 0-30
5	BLOCK	1	NS	2 x 2 x 2 LG
4	SCR SCREW	1	STD	1/4-20 x 3/8 LG
3	LOCATOR	1	NS	5/8 DIA x 5/16 LG
2	SCR SCREW	2	STD	1/4-20 x 1 1/2 LG
1	SPACER	1	FS	1/2 x 1 x 1 LG

REVISIONS

SYM	DESCRIPTION	DATE	APPR
A	MADE THE FOR TOLERANCE OF CL		
B	ADDED REF FOR SUPPLIES SEAL		

UNLESS OTHERWISE SPECIFIED DIMENSIONS APPLY AFTER ALL COATING OR PLATING TOLERANCE ON ALL DIMENSIONS ± 0.005 FRACTIONS ± 1/64

MATERIAL: AS NOTED

DRAWN BY: [illegible] 1 FEB 1962
TRACED BY: [illegible]
DESIGNED BY: [illegible]
CHECKED BY: [illegible]
SUBMITTED BY: [illegible]
APPROVED BY: [illegible]

FIXTURE GAGE

CONTRACTOR'S DRAWING NO.
OFFICE OF THE ARMY
"O.T.A.C."

SIZE 10879880
F
SCALE 1/1 SHEET 1 OF 2

(A) 1962 33

02-3283