(EXTERNAL) INVOLUTE SPUR GEAR (SEE VIEW A)	
NUMBER OF TEETH	80
DIAMETRAL PITCH	8
PITCH DIAMETER (REF)	10.0000000
BASE DIAMETER (REF)	9.3969262
PRESSURE ANGLE	20
ADDENDUM (REF)	.1250
WHOLE DEPTH (REF)	.300
CIRCULAR PITCH (REF)	.3927
ARC TOOTH THICKNESS AT PITCH DIA	.1956 – .1936
DEGREES ROLL – FORM DIAMETER (REF)	16.64°
DEGREES ROLL – PITCH DIAMETER (REF)	20.85
DEGREES ROLL – OUTSIDE DIAMETER (REF)	24.89
DEGREES ROLL – TOTAL (REF)	7.91
MAX. RUNOUT TOLERANCE	—
TOOTH TO TOOTH COMPOSITE ERROR – MAX	.0008
TOTAL COMPOSITE ERROR – MAX IF INSPECTED WITH MASTER GEAR	.0032
PROFILE TOLERANCE (TIR MAX.)	SEE PROFILE CHART
MAX. LEAD TOLERANCE (90% OF WIDTH)	.0007
PIN DIAMETER	.2160
MEASUREMENT OVER (TWO PINS)	10.3032 – 10.2980
REFERENCE AXIS	-C- & -D-
MEASURING WIRES MUST CONFORM TO SPEC GGG-W-366	

DEFINITIONS OF TERMS & MEASUREMENT OF ERRORS ARE AS SPECIFIED IN A.S.A. B5.15 – 1960 PAGES 5, 6, 8, 9 & 10

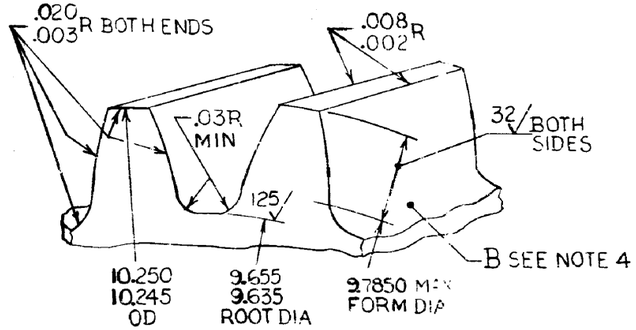

VIEW A AT GEAR TEETH
NO SCALE

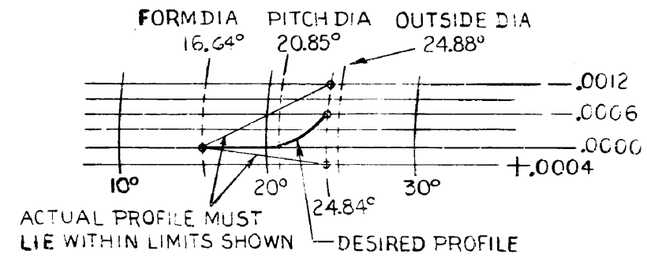

TOOTH PROFILE CHART

REVISIONS				
ZONE	LTR	DESCRIPTION	DATE	APPROVED
	A	SEE RD11628321-A	[illegible]	[illegible]
	B	SEE RD11628321-B	[illegible]	[illegible]
	C	SEE RD11628321-C	[illegible]	[illegible]
	D	SEE RD11628321-D	[illegible]	[illegible]

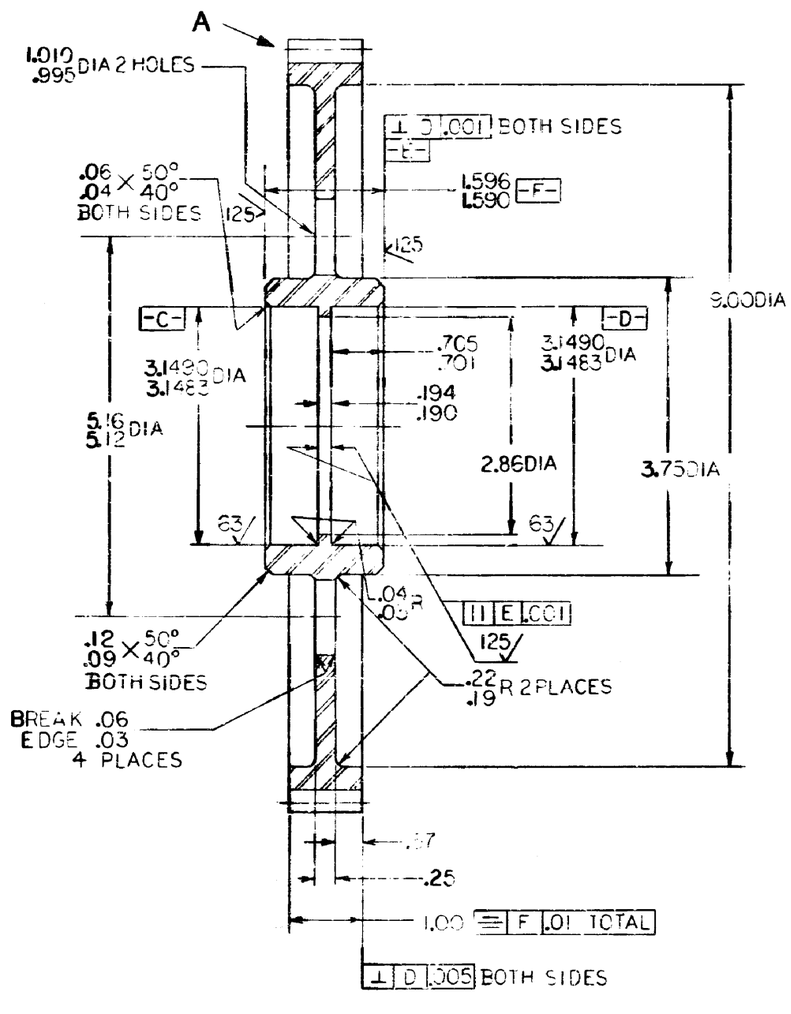

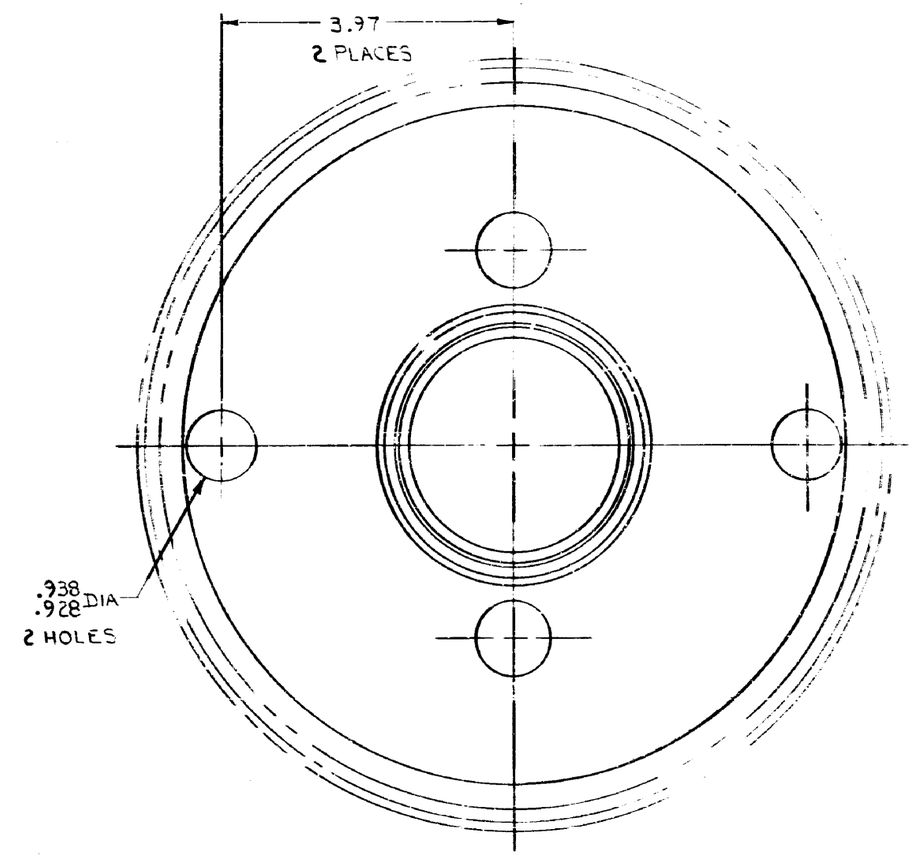

NOTES:

1. APPLY PART NUMBER PER MIL-STD-130
2. 250 ALL SURFACES UNLESS OTHERWISE SPECIFIED
3. BREAK SHARP EDGES EXCLUSIVE OF GEAR TEETH .030 MAX
4. CARBURIZE GEAR TEETH AND ROOT DIAMETER. QUENCH AND TEMPER TO SURFACE HARDNESS RHC 58 MIN. CASE DEPTH .015-.025 (EFFECTIVE). CARBURIZING OF OTHER SURFACES OPTIONAL. CORE HARDNESS TO BE RHC 32 TO 45. (EFFECTIVE DEPTH IS DEPTH OF CASE AT RHC 50). CHECK CASE HARDNESS AT 8 OR USE SUITABLE SAMPLE TO CHECK CASE DEPTH AND HARDNESS REQUIREMENTS.
5. ALL DIAMETERS SHALL BE ◎ D.C .010 DIA UNLESS OTHERWISE SPECIFIED
6. DIAMETERS -C- & -D- SHALL BE ◎ .0005 DIA

INTERPRET DRAWING IN ACCORDANCE WITH STANDARDS PRESCRIBED BY MIL-STD-100

PART NO. 11628321

11628391	HMPT-500	UNLESS OTHERWISE SPECIFIED DIMENSIONS ARE IN INCHES	CONTRACT NUMBER DAAE07-[illegible]-C-0100	U.S. ARMY TANK AUTOMOTIVE COMMAND WARREN, MICHIGAN 48090
SEE ENGINEERING RECORDS		TOLERANCES ON: 2 PLACE ±.01, 3 PLACE ±—, ANGLES ±—	CONTRACTOR GENERAL ELECTRIC CO. CODE IDENT 97993	GEAR, SPUR
NEXT ASSY	USED ON	MATERIAL STEEL ALLOY AISI 4620H OR AISI 8620H QQ-S-624	DRAWN BY [illegible] DATE 11-8-72	
APPLICATION		MATL ENGRG —	CHECKER [illegible] ENGINEER [illegible]	SIZE D CODE IDENT. NO. 19207 11628321
			DRAWING APPROVAL	SCALE 1:1 UNIT WT. — SHEET —
			DESIGN APPROVAL	

D11628321

T-15

105D8750 3 FMC E.OLSZEWSKI 2 45603 1