ZONE	LTR	DESCRIPTION	DATE	APPROVED	
	F	REDRAWN WITH CHANGE ERR VSE R5355	93-12-30	TGP	
	H	(2) CHANGED VIEW PICTORIALLY IN ZONES C, D6, 7 ERR VSE P8776	95-01-16	AS	WCR
	J	REDRAWN W/CHANGES (1) DELETED TOLERANCE AND DIM. ERR ACT I U6806	03-12-08	FB	RA

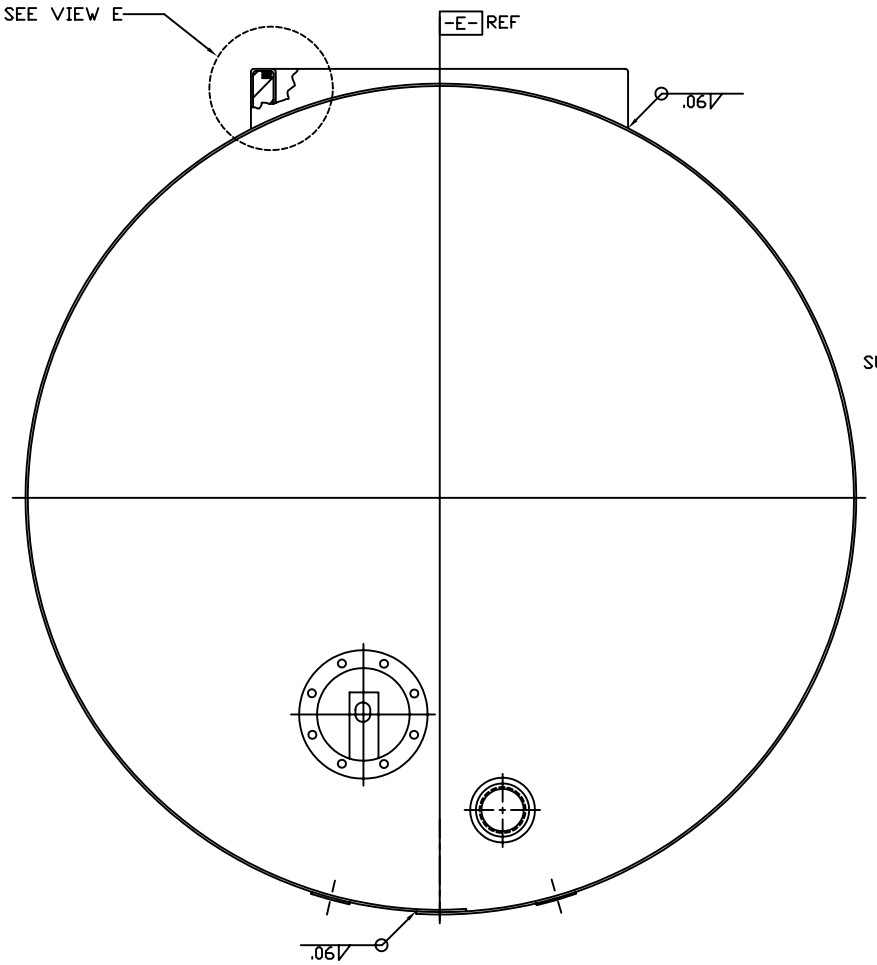

VIEW A-A
SH 1, C6
SCALE 1/2

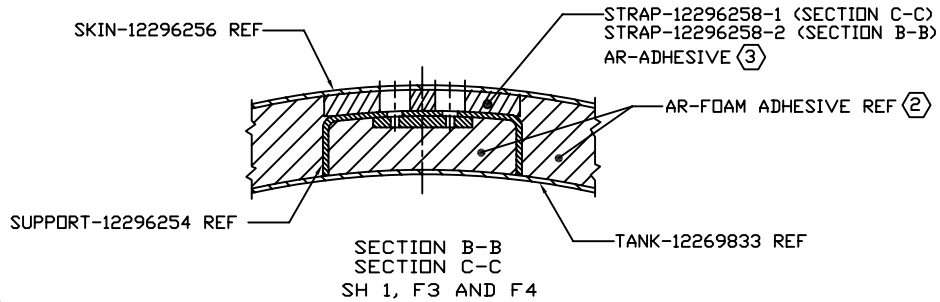

SECTION B-B
SECTION C-C
SH 1, F3 AND F4

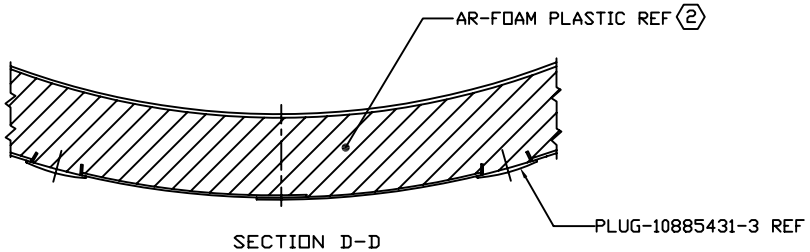

SECTION D-D
SH 1, C3

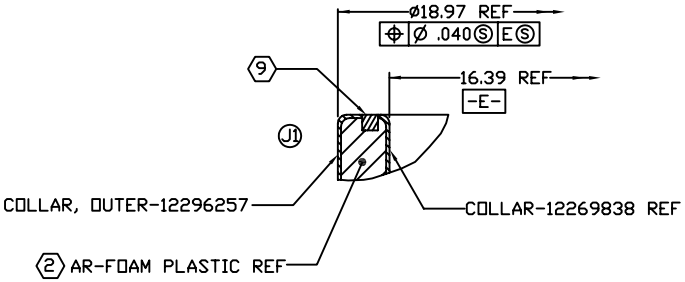

VIEW E

PART NO. SEE TABULATION

PMIC A	UNLES OTHERWISE SPECIFIED DIMENSIONS ARE IN INCHES. TOLERANCES ON: 2 PLACE ± .06 3 PLACE ± ——	CONTRACT NUMBER DAAE07-91-C-R065 CONTRACTOR VSE CORPORATION 2550 HUNTINGTON AVENUE ALEXANDRIA, VA 22303-1499 CAGE CODE 31982	U.S. ARMY TANK AUTO & ARMAMENT CMD CENTER WARREN, MI 48397-5000
		DRAWN BY LNJ / DATE 93-06-29	TANK, INSULATED
		CHECKER GB / ENGINEER TB	
		DRAWING APPROVAL BB 10-28-93	SIZE E / CAGE CODE 19207 / 12296250
NEXT ASSY / USED ON	MATL. ENGR TF	DESIGN APPROVAL UD	1/4 / UNIT WT LBS / SHEET 2 OF 2
APPLICATION			