NOTES:
1. MATERIAL:
   STAINLESS STEEL, TYPE 304L,
   FINISH 2B, SPEC ASTM A240/A240M-03c (B1)
   OPTIONAL MATERIAL:
   STEEL STAINLESS TYPE 304L, (B2)
   FINISH 4 SPEC ASTM A240.
2. REMOVE BURRS AND BREAK SHARP EDGES.
3. WELD PER MIL-STD-1261, CLASS 2.
   GMAW OR GTAW, USE WIRE PER AWS A5.9.
4. ALL WELD SIZES ARE MINIMUM.
5. QUALITY ASSURANCE PROVISIONS
   (QAPS) APPLY TO THIS DRAWING
   (QAP NO. SAME AS PART NO.).

ZONE	LTR	DESCRIPTION	DATE	APPROVED	
——	——	INITIAL RELEASE (TAC-H2700)			
E7 C2 C2 B4 E7 G4 H7 C2	A	(1) (2)(3) REV PIX (4) WAS .135 (5) ADDED DIM (6) WAS 1.82±.01 (7) ADDED HOLE (8) WAS 18.00 (9) WAS 1.75±.25 (10) WAS 1.94 (11) WAS .97 (12) WAS 15.00 (13) ADDED HOLE (14) WAS .138-4CUNF-2B, 12 HOLES (15) WAS BUTT WELD (TAC4418)	9-18-79	GB	GB
B7	B	(1 7 2) REVISED NOTES 1 & 2 SEE ERR BRI-J3306	8-27-81	KGB	RPJ
H6 G5 G4	C	(1), (2) REMOVED 18 .165 HOLES AND LOCATING DIM (3) ADDED 8.80 DIM (BRI L7426)	8-11-86	BD	KGB
	D	SEE NOR (BRI-M6319)	11-16-89	EI	GAD
	E	REDRAWN W/CHANGES TO NOTE 1 ERR ACT I U6806	03-12-08	FB	RA

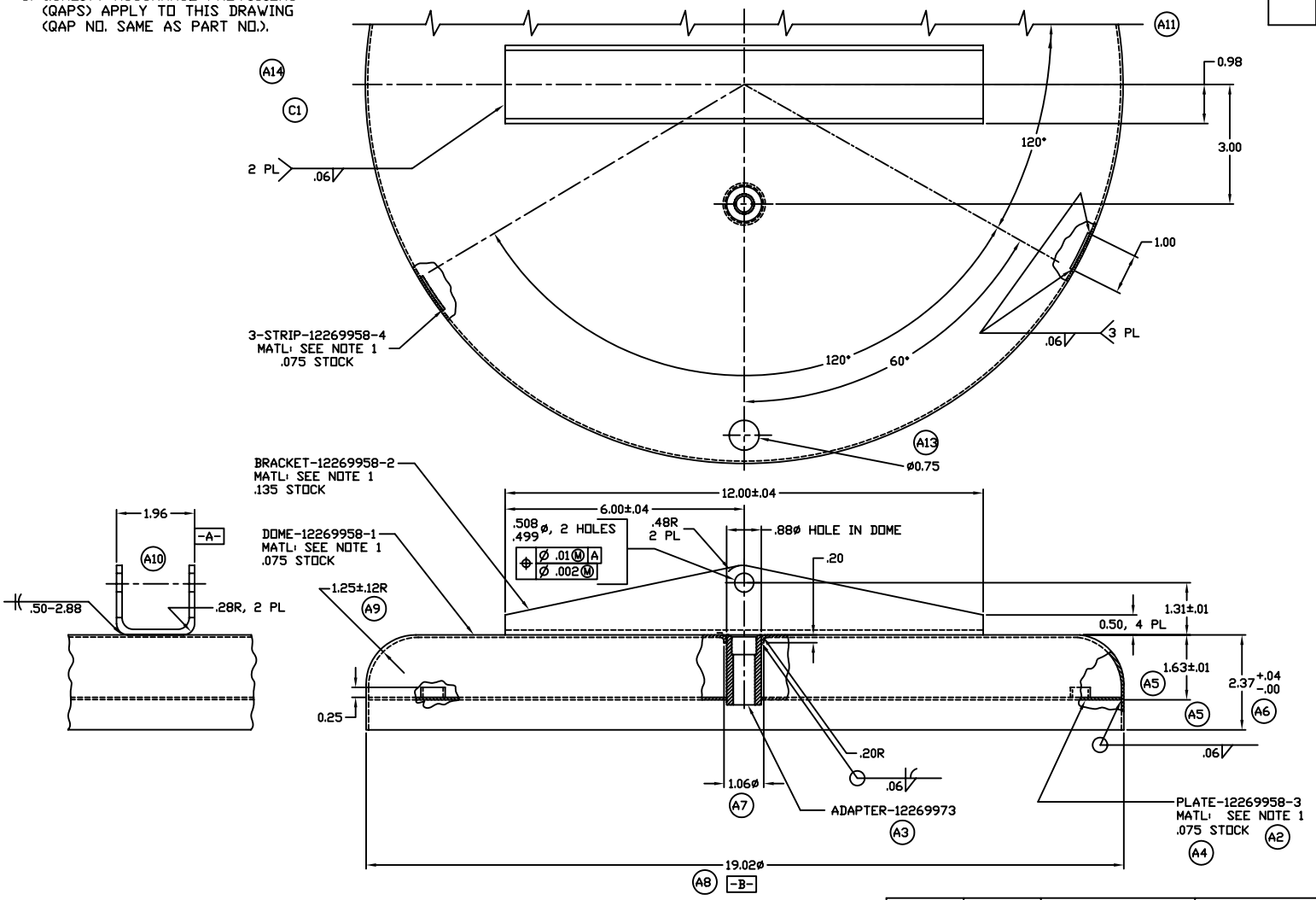

PART NO. 12269958

12355961		UNLES OTHERWISE SPECIFIED DIMENSIONS ARE IN INCHES. TOLERANCES ON: 2 PLACE ± .02 3 PLACE ± ——	CONTRACT NUMBER / CONTRACTOR	U.S. ARMY TANK AUTO & ARMAMENT CMD CENTER WARREN, MI 48397-5000
122699951	M149A2		DRAWN BY GB / DATE 3-15-78	COVER, MANHOLE
NEXT ASSY	USED ON	MATL. ENGR	CHECKER RJC / ENGINEER TB	SIZE E / CAGE CODE 19207 / 12269958
APPLICATION			DRAWING APPROVAL AEB	
			DESIGN APPROVAL GBM	SCALE 1:1 / UNIT WT LBS / SHEET 1 OF 1

INTERPRET DRAWING IN ACCORDANCE WITH STANDARDS PRESCRIBED BY DOD-STD-100