NOTES:

1. MATERIAL:
   STAINLESS STEEL TYPE 304L,
   FINISH #4 SPEC ASTM-A240/A240M-03c,
   GAUGE 12 (.105 THICK)

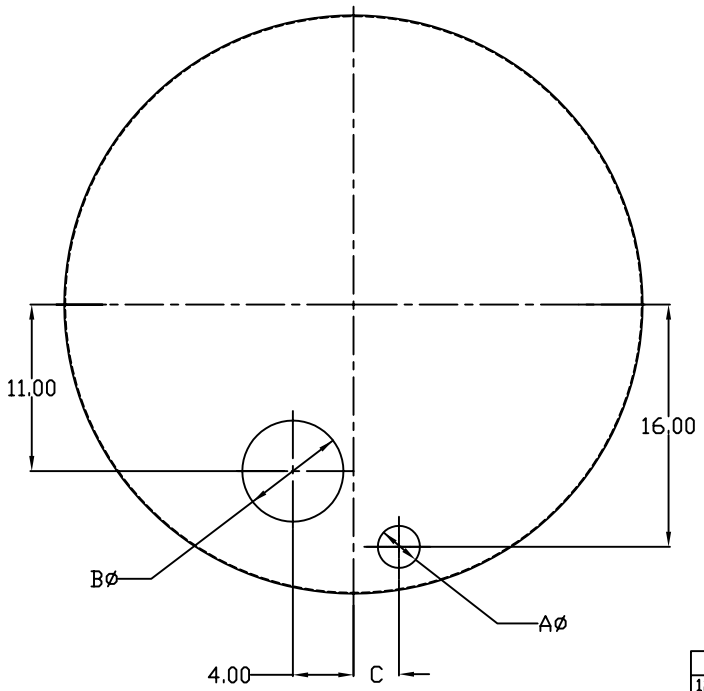

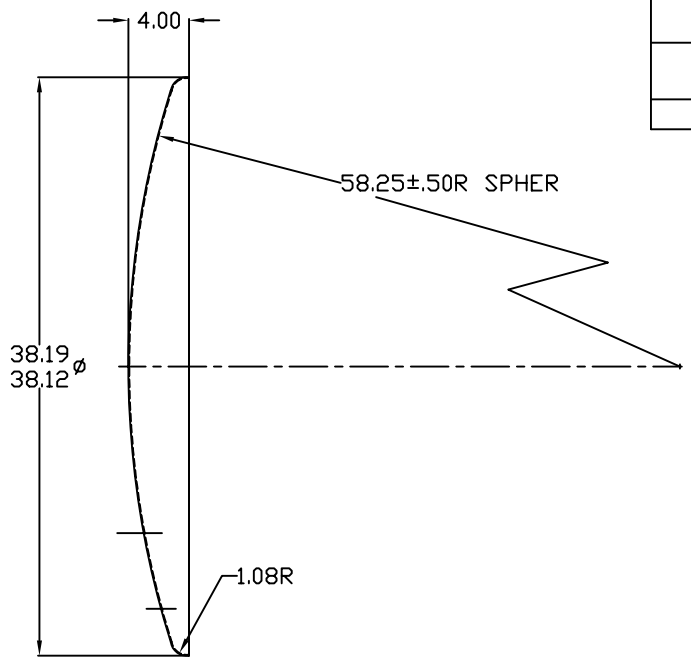

PART NO.	A	B	C
12269834-1	1.59 (A1)	0	--
12269834-2	2.78 (A2)	0	--
12269834-3	2.78	6.670+.015	3.00

ZONE	LTR	DESCRIPTION	DATE	APPROVED	
——	——	INITIAL RELEASE (TAC-H2700)			
A5	A	(1) WAS OMIT HOLE (2) WAS 3.76-3.79 (TAC H4418)	12-4-79	GB	GB
B7	B	REVISE NOTE 1 SEE ERR BRI-J3306	8-27-81	KB	PJ
	C	(1) CHANGED TAB. BLOCK IN ZONE A4, 5, 6 (2) CHANGED PICTORIALLY AND ADDED DIM. AND CALLOUT IN ZONE B, C7, 8 ERR VSE R5355	93-08-30	TGP	GW
	D	(1) AND (2) CHANGED VIEW PICTORIALLY IN ZONES B, C6, 7 AND B4 (3) CHANGED TABULATION BLOCK ERR VSE P8776	95-01-16	AS	MCR
	E	REDRAWN W/CHANGES TO NOTE 1 ERR ACT I U6806	03-12-08	FB	RA

INTERPRET DRAWING IN ACCORDANCE WITH STANDARDS PRESCRIBED BY DOD-STD-100

12269833	M149A2
NEXT ASSY	USED ON
APPLICATION	

UNLES OTHERWISE SPECIFIED DIMENSIONS ARE IN INCHES.
TOLERANCES ON:
2 PLACE ± .02 3 PLACE ± ——

MATERIAL
SEE NOTE 1

MATL. ENGR

CONTRACT NUMBER
CONTRACTOR

DRAWN BY HP | DATE 12-22-77
CHECKER RJC | ENGINEER GB
DRAWING APPROVAL AEB
DESIGN APPROVAL GBM

PART NO. SEE TAB

U.S. ARMY TANK AUTO & ARMAMENT CMD CENTER
WARREN, MI 48397-5000

HEAD, INNER

SIZE	CAGE CODE	
D	19207	12269834
1/4	UNIT WT LBS	SHEET 1 OF 1