ZONE	LTR	DESCRIPTION	DATE	APPROVED	
	G	REDRAWN WITH CHANGES ERR VSE R5355	93-12-30	WCR	
B, C5	H	(5) CHANGED VIEW PICTORIALLY CHANGED 2 DIM AND ADDED DIM. A IN ZONES D, E7,8 (6) CHANGED DETAIL 12269833-2 IN ZONES B, C, D 1, 2 (7) CHANGED VIEW D-D ERR VSE P8776	95-01-16	AS	WCR
	J	REDRAWN W/CHANGES (1) ADDED VIEW F-F AND SECTION G-G (2) CHANGED VIEW E-E (5) CHANGED VIEW PICTORIALLY ERR ACT I U6806	03-12-08	FB	RA

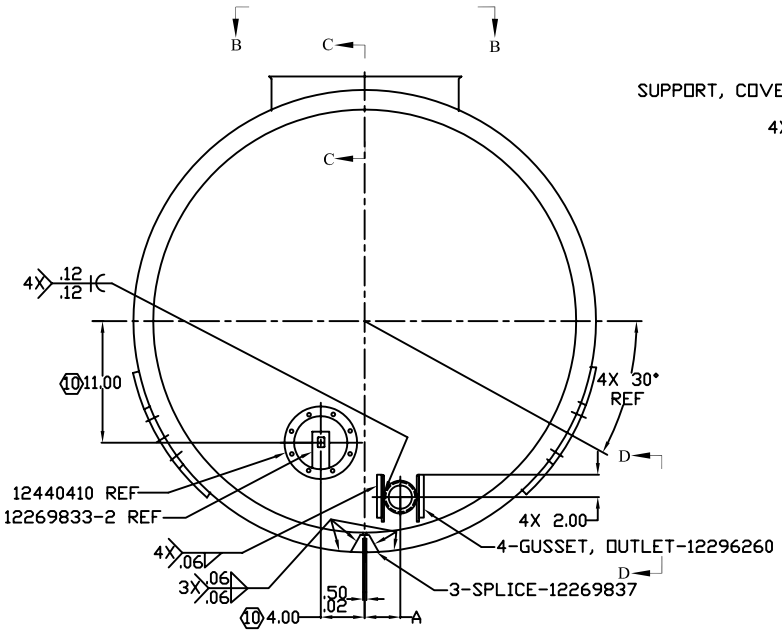

VIEW A-A
SH 1, F6
SCALE 1/4

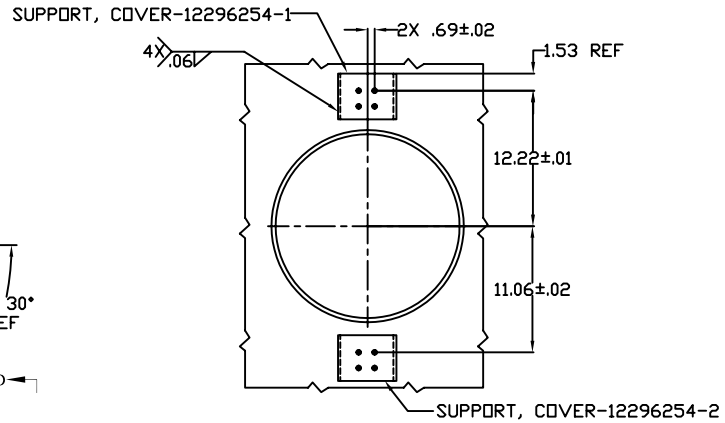

VIEW B-B
SCALE 1/4

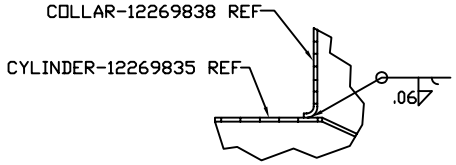

SECTION C-C
SCALE 1/1

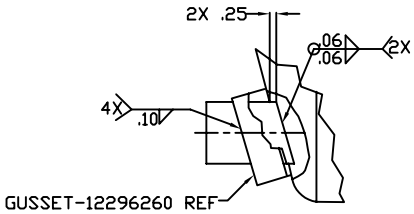

VIEW D-D

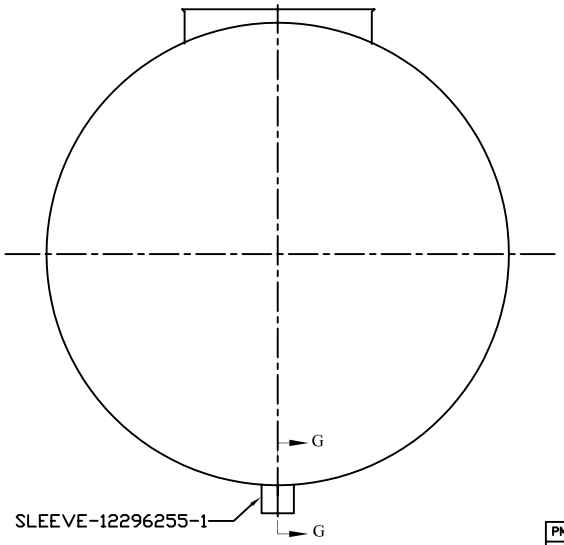

VIEW F-F

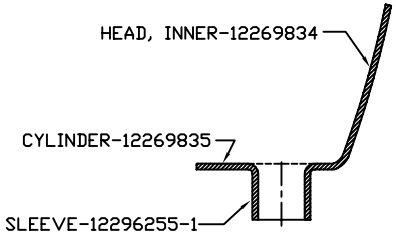

NOTE:
AFTER WELDING, LOCAL SURFACE AROUND DRAIN PLUG SHALL NOT BE HIGHER THAN THE INNER SURFACE OF THE TANK ON ANY LONGITUDINAL PLANE.

SECTION G-G

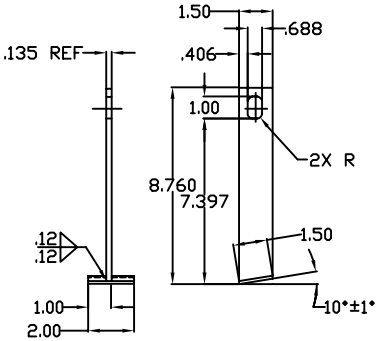

DETAIL OF 12269833-2 (2)

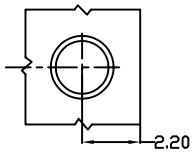

VIEW E-E
CENTERLINE IS BOTTOM OF TANK
SH 1, C2

PART NO. 12269833

PMIC	UNLES OTHERWISE SPECIFIED DIMENSIONS ARE IN INCHES. TOLERANCES ON: 2 PLACE ±.04 3 PLACE ±.015	CONTRACT NUMBER DAAE07-91-C-R065 CONTRACTOR VSE CORPORATION 2550 HUNTINGTON AVENUE ALEXANDRIA, VA 22303-1499 CAGE CODE 31902	U.S. ARMY TANK AUTO & ARMAMENT CMD CENTER WARREN, MI 48397-5000
		DRAWN BY LNJ / DATE 93-07-14	TANK, INNER
		CHECKER RJC / ENGINEER GB	
		DRAWING APPROVAL BB 10-28-93	SIZE E / CAGE CODE 19207 / 12269833
NEXT ASSY / USED ON	MATL. ENGR	DESIGN APPROVAL UD	SCALE 1:1 / UNIT WT LBS / SHEET 2 OF 2
APPLICATION			